

STANDARD SPECIFICATIONS WATERWORKS CONSTRUCTION

2022

Copyright © The City of Calgary 2022
No part of this work may be reproduced by any means
without written permission from The City of Calgary.



This document is available for download online at:
www.calgary.ca/PDA/pd/Pages/Urban-Development/Urban-Development-publications.aspx

TERMS OF USE

The "2022 Standard Specifications Waterworks Construction" is made available for use in the City of Calgary effective as of the date below.

January 1, 2023
Date



July 13, 2022 ID # 84949

May Cayanan, P.Eng, M.Eng
Team Leader, Standards and Specifications, Inspection Services

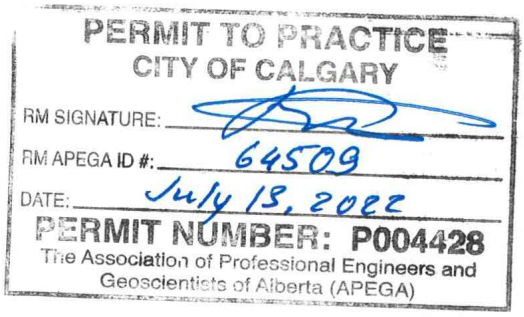

Gregory Kozhushner, P.Eng
Leader, Drinking Water, Linear Infrastructure Delivery

The "2022 Standard Specifications Waterworks Construction" is presented as accurate and complete as of the date indicated above. Use of these Specifications shall not absolve any user from the obligation to exercise their professional judgment and follow good practice. Should any user have question as to the intent or accuracy of any specification or drawing herein, or concern that conflict may exist between the manufacturers' or suppliers' recommended installation procedures and these Specifications, the user is advised to seek clarification from the Team Leader, Standards and Specifications.

UTILITY AND PIPELINE LOCATION NUMBERS

Prior to commencement of any work the Contractor is responsible for contacting the appropriate authorities to locate existing underground utilities and pipelines in or adjacent to the construction work site. The utility or pipeline agencies must be contacted a minimum of two (2) working days in advance prior to commencement of work.

ALBERTA 1st CALL - FIELD LOCATION SERVICE CALLS

ATCO	Alberta 1st Call 1-800-242-3447 www.alberta1call.com
Enmax	
Telus	
Water Services	
Petrogas Processing Ltd.	
Home Oil Company Ltd.	
Imperial (Alberta Product Pipeline)	
Allstream Inc.	
Inter-Pipeline	
Shaw Cable	403-716-6035
Calgary Parks (Irrigation Lines)	***311***

EXCAVATION PERMITS

Excavation Permits must be obtained from The City of Calgary Roads Business Unit prior to any excavation in public rights of way. Permits can be obtained by applying online at: https://ePermits.calgary.ca.

EMERGENCY SERVICE

If you accidentally damage the coating, scrape, sever or rupture any underground line please call the appropriate emergency number immediately. Watch for above ground structures such as utility pedestals, power lines and hydrants that are located in roadways, lanes, and private property. If they are damaged, please report the incident immediately.

EMERGENCY CALLS - 24 HOUR SERVICE

ATCO 245-7222
ENMAX.....514-6100
CITY OF CALGARY WATER SERVICES.....311
TELUS.....611
SHAW CABLE TV/FM (24:00 hr line).....716-6060
DEVON CANADA. 264-9994
PETROGAS PROCESSING 226-0022
TRANS NORTHERN (APPL Edmonton)..... 1-800-361-0608

2022 Waterworks Construction Specification Revisions

The following is a list of technical revisions to the *Standard Specifications Waterworks Construction*. Revisions for 2022 are noted in ***bold italics***.

Section	Changes
General	General formatting, spelling, pronoun, and grammar updates.
	Updated all standard references to be (latest revision)
Utility and Pipeline Location Numbers	Added City Park's contact number
	Added section for excavation permits
501.00.00	Added note for referencing between water and sewer specifications
503.01.01 (11)	Added Romac 306-H, Smith Blair 373 saddles
503.01.01 (19)	Created new Restrained Distribution Pipe product section and added relevant products. Added Certa-lok RJIB by NAPCO/Royal
503.01.01 (20)	Added CCI Piping Systems (Type WL-SS)
503.02.01	Added new contact email
503.02.03	Added "or as approved by Engineer"
503.02.05	Updated HDPE requirements
503.02.06	Updated specification reference
	Added allowance for grooved joint ends
503.02.07	Updated hydrant extensions requirements
503.02.11	Added "/shaft" to stainless steel requirements
503.02.19	Reworded gasket requirements for clarity
503.02.20	Clarified main stops requirements on metallic pipe
504.01.00	Added new section title
504.01.01	Updated ESC reference document
504.01.15	Updated ESC reference document
504.01.17	Updated section title
	Updated pipe abandonment requirements
504.01.19	Updated City of Calgary link
504.02.02	Removed restrained pipe products
504.04.03	Updated coating test requirements
504.04.07	Added grooved joint requirements
504.04.13	Added note for insulation tables and reduced depth design

504.05.01	Updated reference section for Flange Gaskets
504.05.03	Added thrust block design requirements
504.09.01	Added volume recording requirements for flushing
504.10.02	Updated minimum residual chlorine levels and reporting requirement
504.11.02	Removed max depth for service valve rod
504.12.00	Updated standard reference to CSA Z662
504.13.00	Updated HCU process
504.14.05	Updated reference document to ACI PRC-304
504.14.06	Clarified concrete testing requirements
504.14.07	Added minimum curing times and requirements
505.02.00	Updated coating test requirements
505.03.00	Add Kema 250 & 250-12 Tape

Sheet Updates	
Sheet 1	Added maximum allowable hydrant extensions
Sheet 13	Corrected Test Point wiring
Sheet 17	Corrected Test Point wiring and wire gauge
Sheet 18	Corrected Test Point wiring
Sheet 26	Added max depth of operating rod
Sheet 33	Clarified inspection requirements and installation, corrected rod sizing and AWWA reference in Note #2
Sheet 42	Updated thrust block table and added note
Sheet 55	Updated HCU installation and inspection process/contact info
Sheet 62	Clarified depth of bury, changed signature on sheet
Sheet 63	Clarified depth of bury, changed signature on sheet

STANDARD SPECIFICATIONS
WATERWORKS CONSTRUCTION

Table of Contents

501.00.00 SCOPE 1
502.00.00 INSPECTION 1
503.00.00 MATERIALS 5
503.01.01 List of Approved Materials 5
1. Distribution Pipe 5
2. Hydrants 5
3. Distribution Valves 5
4. Pressure Reducing Valves, sizes 75 - 300mm 5
5. Check Valves, sizes 100 - 400mm 6
6. Fittings 6
7. Tapping Sleeves 6
8. Couplings 7
9. Water Service Pipe 7
10. Flange Gaskets 8
11. Water Service Saddles 8
12. Main Stops 8
13. Service Valves 8
14. Service Line Couplings 9
15. Service Brass Compression Nut Electrical Connectors 9
16. Service Brass Multi-Fitting - 50mm inlet 9
17. Valves Operating Service Assembly 9
18. Casing Spacers for Carrier & Encasement Pipe 9
20. Wall Sleeves and Wall Penetration Seals for Buried Chambers 9
21. Joint Restraints for PVC Pipe 10
22. Cathodic Protection Galvanic Anodes 10
23. Locking Manhole System 10
24. Buried Warning Tape 10
503.02.00 MATERIAL SPECIFICATIONS 11
503.02.01 Material Approval Procedure 11
503.02.02 Surface Quality of Castings 11
503.02.03 Ductile Iron Pipe 11
503.02.04 PVC Pipe 12
503.02.05 Polyethylene (HDPE) Pipe 14

503.02.06 Steel Pipe 14
503.02.07 Hydrants 15
503.02.08 Distribution Valves 16
503.02.09 Distribution Valve Operating Assembly 17
503.02.10 Pressure Reducing Valves 17
503.02.11 Check Valves 17
503.02.12 Fittings 17
503.02.13 Tapping Sleeves 18
503.02.14 Couplings 19
503.02.15 Electrical Isolating Elements 21
503.02.16 Sacrificial Anodes 21
503.02.17 Test Points 22
503.02.18 Water Service Pipe 22
503.02.19 Water Service Saddles 23
503.02.20 Main Stops 24
503.02.21 Service Valves 24
503.02.22 Service Valve Operating Assembly 25
503.02.23 Isolating Flange Kit 25
503.02.24 Joint Restraints 25
503.02.25 Handling and Storing of Materials 25
504.00.00 EXCAVATION AND INSTALLATION 27
504.01.00 General Site Practices 27
504.01.01 Environmental Protection - Erosion and Sediment Control 27
504.01.02 Excavation Permit 27
504.01.03 Starting Point of Work 27
504.01.04 Site Preparation 27
504.01.05 Excavation in Newly Re-Surfaced and Top-Lifted Roads 27
504.01.06 Barricade Guards and Safety Provisions 27
504.01.07 Standard Trench 28
504.01.08 Water in Excavation 28
504.01.09 Amount of Open Excavation 28
504.01.10 Excavation to Grade 29
504.01.11 Bracing and Shoring 29
504.01.12 Unstable Sub-grade 29
504.01.13 Pavement Curb & Gutter and Sidewalk Cuts & Removal 29
504.01.14 Trenching by Hand 30

504.01.15 Spill Pile 30
504.01.16 Disposal of Salvaged Material 30
504.01.17 Abandonment of Mains, Services, Chlorination Points and Appurtenance Piping 30
504.01.18 Rock Excavation 31
504.01.19 Planned Interruption of Services 31
504.02.00 Crossings and Encasements 33
504.02.01 Crossing of Shallow and Deep Utilities 33
504.02.02 Carrier and Encasement Pipe 34
504.02.03 Crossing of Railway Lines 35
504.03.00 Bedding and Pipe Zone Backfill 36
504.03.01 Bedding Classification 36
504.03.02 Bedding for Distribution Mains and Service Pipe 36
504.03.03 Bedding for Steel & Concrete Feedermains 36
504.03.04 Suitable Bedding Materials 36
504.03.05 Bedding Material for Polyethylene Coated Ductile Iron, Epoxy Coated Steel, PVC and Concrete Feedermain, PVC & HDPE Forcemain Pipe 38
504.03.06 Special Foundation in Rock and Gravel 38
504.03.07 Special Foundation in Unstable Soil 38
504.03.08 Pipe Zone Back-fill and Compaction 39
504.03.09 Ground Water Plugs and Weeping Holes at Storm Manholes 39
504.04.00 Installation of Pipe 40
504.04.01 General 40
504.04.02 Alignment and Grade 40
504.04.03 Inspection of Materials prior to Installation 40
504.04.04 Lowering of Pipe into Trench 40
504.04.05 Laying of Pipe 41
504.04.06 Cutting of Pipe 41
504.04.07 Jointing of Coated Ductile Iron Pipe (Urecon, Thermacor, Shaw YDI) 41
504.04.08 Jointing of Polyvinyl Chloride (PVC) Pipe 41
504.04.09 Jointing of Steel Pipe 41
504.04.10 Jointing of Concrete Pipe 42
504.04.11 Jointing of Polyethylene (HDPE) Pipe 43
504.04.12 Permissible Joint Deflection 43
504.04.13 Cover Over Distribution Mains and Service Pipe 44
504.04.14 Connections to Feedermains 44
504.04.15 Frost Protection 44
504.04.16 Main Replacement and Alteration Projects 45

504.05.00 Installation of Valves, Fittings, Flanges and Hydrants 45
504.05.01 General 45
504.05.02 Distribution Valves 46
504.05.03 Fittings 47
504.05.04 Hydrants 47
504.06.00 Installation of Couplings 47
504.06.01 General 47
504.06.02 Bolted Sleeve & Flange Coupling Adapters 47
504.06.03 Victaulic Couplings 48
504.07.00 Installation of Cathodic Protection 48
504.07.01 General 48
504.07.02 Installation of Sacrificial Anodes 48
504.07.03 Cathodic Protection for a Non-metallic Pipe System 49
504.07.04 Cathodic Protection for an Existing Metallic Pipe System 49
504.07.05 Cathodic Protection for a New Metallic Pipe System 50
504.08.00 Compaction and Back-filling 51
504.09.00 Water System Commissioning 51
504.09.01 General 51
504.09.02 Preliminary Flushing of Mains and Services 52
504.09.03 Pressure Testing Procedure 53
504.09.04 Allowable Leakage 54
504.10.00 Disinfecting and Final Flushing 55
504.10.01 General 55
504.10.02 Disinfecting and Final Flushing of Mains and Services 55
504.11.00 Installation of Water Services 56
504.11.01 General 56
504.11.02 Installation of Water Services 58
504.12.00 Welding Specifications 62
504.13.00 Permission to Use Water for Construction 63
504.14.00 Concrete Work 65
504.14.01 Material for Concrete 65
504.14.02 Design Mixing and Control of Concrete 65
504.14.03 Reinforcing Steel 66
504.14.04 Concrete Formwork 68
504.14.05 Placing of Concrete 69
504.14.06 Testing 70

504.14.07 Curing 71
504.14.08 Cold Weather Concrete 71
504.15.00 Restoration 71
504.16.00 Utility and Tree Clearances 72
505.00.00 COATING SPECIFICATIONS 74
505.01.00 Coating Specifications for Castings 74
505.02.00 Coating Specifications for Ductile Iron Pipe 76
505.03.00 Field Applied Coating and Wrapping 76
LIST OF STANDARD DRAWINGS 78

STANDARD SPECIFICATIONS

WATERWORKS CONSTRUCTION

501.00.00 SCOPE

These Specifications form part of the Contract Documents for the installation of distribution main, feeder main, and water and sewer service connections. Distribution mains are generally defined as main 400mm in diameter and smaller and feeder mains are generally defined as mains larger than 400mm in diameter.

All work performed on existing and new water systems shall be carried out in accordance with the latest issue of the Standard General Conditions, the Standard Specifications for Waterworks Construction, and the Manufacturer's Specifications. In case of any inconsistency or conflict between these documents the provision of documents shall govern in the following order:

1) The Standard General Conditions
2) The Standard Specifications for Waterworks Construction
3) The Manufacturer's Specifications

Unless otherwise specified, the Contractor shall furnish all material, equipment, tools, and labor necessary to do the work.

In these Specifications, the term "Engineer" shall denote the Director, City of Calgary Utilities Delivery, or his authorized representative. Any deviation from these Specifications and the approved Construction Drawings must have the written approval of the Engineer.

Note that all inspection procedures and any required notifications described with these Specifications apply to new or existing City-owned water and sewer infrastructure, new subdivision projects and for specific aspects of new private developments as outlined in the current edition of Development Site Servicing Plan (DSSP) Guidelines.

At the discretion of the Engineer, the Standard Specifications Sewer Construction may be referenced for water installations as a supplement for existing or missing specifications.

502.00.00 INSPECTION

General

The Engineer shall have free and uninterrupted access to work areas for the purpose of carrying out inspections. The Contractor shall provide, at no cost to the City, such labor and access as may be required to enable the Engineer to carry out a complete inspection of all installation and materials. The Contractor shall provide adequate samples of materials for testing purposes.

The Engineer has the authority to stop work and order the re-excavation and removal of any or all installations if any material or installation method employed does not conform to these Specifications.

All material found during the progress of the work with cracks, flaws or other defects shall be rejected by the Engineer. All rejected materials shall be promptly removed from the work site by the Contractor.

The Contractor shall give 48 hours' notice to the Inspection Section of his intention to commence construction of all new installations and prior to commencing of the following repair work:

- Repair of mains and service connections.
- Repair of cathodic protection systems.
- Repair of valves, hydrants, and pressure-reducing valves.
- Construction or maintenance work for other utilities which require the exposure of a water main.

It is the Contractor's responsibility to ensure that all work is inspected by Water Resources Inspections prior to back-filling. The Final Acceptance Certificate will not be issued if inspection of new construction and/or maintenance work was not requested.

The Water Resources Inspection Section may be contacted by email at: WaterUtilityInspections@calgary.ca

Inspection of Site Prior to Construction

Prior to construction, the Contractor shall carry out an inspection of the work sites to identify any damage or deficiencies that might exist on, or adjacent to the work area. The Contractor shall notify the Engineer in writing of all such deficiencies or damage prior to construction. Any deficiencies or damage not identified by the Contractor prior to construction shall be corrected or repaired by the Contractor at no expense to the City.

Inspection of Sacrificial Anodes and Test Points

All installations of sacrificial anodes, test points, and related wiring shall be inspected by the Engineer prior to back-filling. It shall be the Contractor's responsibility to notify the Engineer and request inspection of each cathodic protection installation. Where back-filling over anodes and test wires has been carried out prior to inspection, the Contractor shall, when requested by the Engineer, re-excavate and expose all anodes and test wires, at no cost to the City, for the purpose of inspection.

Daily Progress Report

These "daily progress reports" will be used for the preparation of progress payments on City administered contracts. Progress reports shall be made out in quadruplicate by the on-site City Inspector for each day's work.

These reports will include all work done by the Contractor each day as broken down in the schedule of quantities and in addition, will provide a detailed list of all equipment, materials, and labor supplied on force account, including the force account rates. The Contractor shall also provide a copy of all utility location slips as part of the daily report.

An authorized representative of the Contractor shall sign each "daily progress report" within 24 hours after the completion of each day of work, acknowledging that they have carefully examined the quantities of the work performed as indicated on the "Daily Progress report" for that day and agrees as to its accuracy. Should any dispute result with respect to the quantity of any work performed on the day, it shall be brought immediately to the Engineer's attention by the Contractor

If the dispute is not resolved immediately, the Contractor shall place on file with the Engineer a written report clearly stating their position and quantities of work for which they feel that they should be paid. Failure to file such written notice within 48 hours of advising the Engineer shall result in the use of the quantities indicated on the disputed "daily progress report" in the preparation of progress payments without further recourse by the Contractor even if they have not signed the "daily progress report".

Should an error in quantities be discovered on any "daily progress report" after it is signed, it may be corrected providing both parties mutually agree to the change. If the quantities can be readily measured, the re-measured quantity shall be used for payment.

The Contractor shall give advance notice to the inspector of his intention to perform force account work. The amount of force account work and force account rates shall be mutually agreed to by both parties prior to performing the work. The Contractor will be provided with two (2) copies of each signed "daily progress report" for their files.

The purpose of the "Daily Progress Report" is:

1) To avoid disputes over the quantities of work done when making out progress payments.
2) To mutually agree on the quantities of work performed prior to completion of the work so that measurements can be more readily retaken if a dispute results.
3) To avoid inadvertently leaving out work performed by the Contractor when preparing the progress payments.
4) To set up a procedure for the Contractor to follow if a dispute results so that it can be resolved at the earliest time.
5) To aid the Engineer and the Contractor in evaluating the progress of the construction.

502.00.01 REPORT SUBMISSIONS

The following is a list of reports that must be forwarded to the Engineer, and the locations in which they are referenced within this Specification.

Completed reports shall be sent to:

City of Calgary

(Division Name and Mail Code as listed below)

P.O. Box 2100, Station M

Calgary, AB. T2P 2M5

Water Resources, Infrastructure Delivery (Mail Code #38)

Attention: Inspection Services

1.0 Concrete Testing Reports

SECTION 504.14.06

2.0 Additional testing on materials as requested by the Engineer

SECTION 503.01.00

3.0 Welding Test Reports

SECTION 504.12.00

4.0 Cathodic Protection Testing

SECTION 504.07.04

CALGARY ROADS (Mail Code #71)

Attention: Senior Compaction Inspector
Geotechnical and Inspection Services

5.0 Backfill and Compaction

Reports SECTION 403.08.04

6.0 Backfill Compliance Certificate

SECTION 403.08.05

503.00.00 MATERIALS

503.01.01 List of Approved Materials

The following is a list of approved materials. For detailed specifications of all materials refer to Sec. 503.02.00 and/or Standard Drawings. The materials listed below have received approval by the City of Calgary Water Resources based on meeting various Specifications (e.g. AWWA, CSA, ASTM, UL, FM, NSF, etc.) and the testing of samples supplied by Manufacturers to the City. Subsequent design changes by a Manufacturer to approved items on this list may result in the City withdrawing an approval. Changes to the design or specifications of approved materials require re-application for approval as specified in Sec. 503.02.01.

1. Distribution Pipe

Ductile Iron Pipe (Yellow Jacket Coated), sizes 100 - 400mm
Canada Pipe Company Ltd., U.S. Pipe, or approved equal
Polyvinyl Chloride Pipe (PVC), sizes 100 - 400mm
IPEX, Napco/Royal, NEXT, or approved equal

2. Hydrants

Clow Brigadier - McAvity M67B
Mueller Modern & Super Centurion
Terminal City C71-P
AVK Model 2700 & Model 2780 or approved equal

3. Distribution Valves

Line Valves
Resilient seated Gate Valves, sizes 150-400mm
Mueller, Clow, AVK, TCIW or approved equal
Flange to Hub Valves (for tapping)
Resilient Seated Gate Valves, sizes 150 - 300mm
Mueller, Clow, AVK, TCIW or approved equal

Master Control Valves
OS&Y Gate Valves, sizes 100-300mm
AVK, Mateo, Toyo, Watts, Mueller, TCIW, Clow, Kennedy,
Zurn Wilkins, United Water Products or approved equal

Important Note: Dual use Master Control valves for Combination Fire and Domestic service lines shall be UL, ULC, & FM listed.

4. Pressure Reducing Valves, sizes 75 - 300mm

Cla-Valve: *Model 90-01DSY (sizes 75mm and smaller)
*Model 90-01BSY (sizes 100mm and larger)
Singer: *Model 106 - PR-C (sizes 100mm and larger)
Watts: *Mustang M115-3 (sizes 100mm - 250mm)
*See Sec. 503.02.10 for listing of additional requirements

5. Check Valves, sizes 100 - 400mm

AVK Series 41
Clow, Model 106
Jenkins,
Matco-Norca 120W & 120 WC
Mueller, A-2600
Toyo/Red-White 435A
Val-Matic Swing Flex
Watts 411 or approved equal

6. Fittings

AWWA C-110-03 Cast Iron: 100 - 400mm:
Tees, crosses, elbows, reducers, and plugs
Crane-McAvity, Terminal City (Metalfit), Norwood, Tyler, Sigma,
OB by Westview, or approved equal

AWWA C-153-00 Ductile Iron: 100 - 400mm:
Tees, crosses, elbows, reducers & plugs
Sigma, Star, Terminal City, Norwood, One-Bolt, or approved equal

AWWA C-907 PVC injection-molded fittings:
Tees, elbows, tapped couplings (AWWA threads), sizes 100-300mm, and line & repair couplings, reducing adapters and plugs, sizes 100 - 300mm
IPEX, Harco, IPEX machined 250 - 300mm or approved equal

AWWA C-900 PVC extruded fittings: 100 - 400mm:
Long body 5° elbows, IPEX, Harco, Royal, Galaxy, or approved equal

AWWA C-900 DR14 PVC heat-formed fittings: 250 - 300mm:
11° & 22° Elbows - Royal, Galaxy, or approved equal
DR14 Socket glued tees - Royal, or approved equal

AWWA C-900 PVC Fiber reinforced repair couplings - 250-400mm:
IPEX, Royal, Galaxy, 250-400mm or approved equal

7. Tapping Sleeves

Stainless Tapping Sleeves, sizes 100 - 400mm
Robar "6606 Bolt Bracket, Romac SST III" (all stainless steel)
Ford "FTSS", Smith Blair 665
JCM 432SS, Mueller H304SS, or approved equal

Mild Steel Tapping Sleeves, sizes 100 - 400mm
Robar 6926 & 6906
Smith Blair 622
Romac FTS 419 & 420
JCM 412 & 422, or approved equal

8. Couplings

Bolted Sleeve-Type Couplings

Non-Isolating Couplings: sizes 100 - 40mm
Robar 1519, Romac 501
Smith Blair OMNI style 442, SB 470 Series Restrained
or approved equal

Isolating Couplings: sizes 100 - 40mm
Robar 1519 c/w Fig 1180 boot
Romac IC & XR501 c/w iso boot,
Smith Blair OMNI style 442 c/w iso boot,
or approved equal

Wide Range Couplings: sizes 100 - 400mm
Smith Blair Quantum 462 (standard and isolating)
Smith Blair 421"Calgary CP Style" (standard and isolating)
Robar 1726 "C" (standard and isolating)
Robar 1696 "All Stainless 304" (standard and isolating)
Hymax 2000 "Calgary CP Style" (standard and isolating)
Romac Macro 261-C "Calgary CP Style" (standard and isolating)

Restrained Wide Range Couplings: sizes 100 - 300mm
Hymax Grip CP Style, Romac Alpha

Flanged Coupling Adapters

Non-Isolating Flange Adapters: sizes 100 - 300mm
Robar 7506, Smith-Blair 912, Romac FCA 501, or approved equal
Romac RFCA (restrained),
EBAA Series 2100 Mega Flange® (restrained)
Smith Blair 911 & 920 (restrained)

Isolating Flange Adapters: 100 - 300mm
Robar 7516 c/w iso boot, Romac FCA 501 c/w iso boot
Smith Blair 912 c/w isolating boot

Restrained Wide Range Flange Adapters: sizes 100 - 300mm
Hymax Grip, Romac Alpha

Restrained Wide Range End Caps: sizes 100 - 300mm
Hymax Grip, Romac Alpha

9. Water Service Pipe

Copper Pipe Type K, sizes 20 - 50mm
Great Lakes, Wolverine, Cerro, or approved equal

PEX Pipe (Cross-linked Polyethylene), sizes 20 - 50mm
Rehau (Municipex), Wirsbo (Aquapex), IPEX Blue 904, or approved equal

Pre-insulated PEX Pipe, sizes 20-50mm
Municipex PI or approved equal

10. Flange Gaskets

Isolating Kit - per Section 503-02-07
Pikotek/GPT PGE-WS & Pikotek IsoCore Isolating Flange Kits
PSI/GPT Linebacker, & Gasket Seal Isolating Flange Kit, (250mm +)
Advance Products Trojan G-10
Lamons Isa-Guard or approved equal

Non-isolating
Terminal City, NBR Full-faced triple O-ring style
Ford, Ultra Seal - CSFG NBR, Romac NBR or approved equal

11. Water Service Saddles

For Ductile Iron and PVC and HDPE Pipes, sizes 100 - 400mm

Isolating Saddle for all metallic pipes
Robar 2786 c/w NBR gasket

Saddles for PVC pipe - all stainless-steel construction only
Robar 2616, 2626
Cambridge Brass 8403, 8405, 8407 or approved equal
Romac 304, 305, 306
Canada Pipeline SC2, SC4
Smith Blair ***373,***374,375,376
JCM 502, or approved equal

Saddles for HDPE
Electro-fused as per Section 503.02.05, or Romac 305H/***306H*** tapping saddle

12. Main Stops

Non-Isolating Main Stops: sizes 20 - 50mm
A.Y. MacDonald (Q Compression Ball)
Ford FB-1000-Q (Quick Connect Joint)
Mueller Series 300 (Compression Joint)
Cambridge Brass Compression Joint, (H Series, Ball Type)
or approved equal

13. Service Valves

Non-Draining Type Curb Stops: sizes 20 - 50mm
A.Y. MacDonald (Q Compression Ball)
Ford, Type B-44-Q (Quick Connect Joint)
Cambridge Brass, Ball Comp Joint (H-
Series) Mueller 300 (Ball, Comp Joint)
or approved equal

Draining Type Curb Stops: sizes 40 - 50mm
A.Y. MacDonald (Q Compression Ball)
Cambridge Brass, Century Ball Successor
Ford B44 -777SW-Q-K, Mueller 300 B25219N
or approved equal

14. Service Line Couplings

Manufacturers as listed for Main Stops and Service Valves

15. Service Brass Compression Nut Electrical Connectors

Cambridge Brass, Mueller, Ford
or approved equal

16. Service Brass Multi-Fitting - 50mm inlet

Ford, Mueller, Cambridge Brass
or approved equal

17. Valves Operating Service Assembly

Bottom Box, Casing, Top Box & Operating Rod for 20 - 400mm Valves
Trojan, Sigma, Norwood Foundry, Westview Castings
Sovereign Castings, or approved equal

18. Casing Spacers for Carrier & Encasement Pipe

For Steel and PVC Pipe (skid height must be equal to or exceed the bell height) the following casing spacers c/w end-seals shall be used:

Carrier Pipe Diameter (mm)	Spacer Length (min mm)	Runner Width (min mm)	Manufacturer	Model
150 - 600	200	25	PSI BWM CCI Advance Silvertip Cascade	S8G-2 SS-8 CSS8 & CSS12 SSI -8 & SSI-M SSBM8 & SSBM12 CCS8 & CCS12
PVC with integral restraints			RACI & PSI Ranger II	

19. *Restrained Distribution Pipe*

Cobra Lock, Certa-Lok, ***Certa-Lok RJIB*** by Napco/Royal
Terra Brute by IPEX
or approved equal

20. Wall Sleeves and Wall Penetration Seals for Buried Chambers

Wall Sleeves
Link Seal Model CS Plastic Sleeve
Link Seal Model WS Steel Sleeve

Wall Penetration Seals
Link Seal (Type C unless otherwise specified)
Advance Products Innerlynx IL-C
Flexicraft - Type E
BWM Pipe Seal
CCI Piping Systems (Type WL-SS)

21. Joint Restraints for PVC Pipe

Sigma PV-Lok
Uniflange, Series 1300, 1350, 1360,1390
Ebaa Iron, Series 1500, 1600, 15PF00, PV2000, 2800
Romac 611, 612, & RomaGrip
Smith Blair 136 & 165
Star Grip 3000 & 4000
or approved equal

22. Cathodic Protection Galvanic Anodes

Pre-packaged Magnesium
Corrpro, ICCC, Canada Metals, Maple Agencies, Bren
or approved equal

Pre-packaged Zinc
Corrpro, ICCC, Canada Metals, Maple Agencies, Bren,
Integrity Anode Corp. or approved equal

Zinc Anode Caps
Protecto-Cap
Cor-Cap
Mars Anode Cap
Seaguard by Canada Metals
Sac Cap by Bren

23. Locking Manhole System

McGard by DuraShield

24. Buried Warning Tape

Empire - Magnatec, ACP - MTP 61000, Pro-Line 10314-3
or approved equal

503.02.00 MATERIAL SPECIFICATIONS

503.02.01 Material Approval Procedure

The City requires that the prior written approval of the Engineer be received for all products to be incorporated in the distribution system. The Engineer reserves the right to withdraw the approval of any product if in their opinion the product does not perform satisfactorily.

Manufacturers whose products conform to these Specifications are encouraged to submit to the City a written request for product approval together with detailed product Specifications and sufficient samples to conduct field evaluations, preference will be given to products manufactured in an ISO 9000 certified production facility. The product evaluation process may exceed a period of one year. Only a complete product line will be considered. ***All new product submissions are to be directed to StandardSpecifications@calgary.ca .***

Pipe Materials for Installation in Contaminated Sites

The design Engineer shall employ qualified expertise to investigate and quantify the types and level of contaminants that are present, perform a design Risk Assessment, and shall then specify appropriate piping and servicing materials to prevent the permeation of non-potable substances into the public drinking water supply. Where a previous unknown contaminated site is discovered during the course of a previously approved installation, work must be stopped and the above course of action undertaken and evaluated prior to any work recommencing. The City Engineer, at any time, may, at their discretion, require additional design considerations, specific materials, or third party review of design proposals prior to approving potable water installations in contaminated sites.

503.02.02 Surface Quality of Castings

All castings for fittings, valve bodies, hydrant barrels, valve bottom and top boxes, valve lids and any other castings which are to be incorporated in the distribution system shall be free from injurious defects. Surfaces of castings shall be free of burned-in sand and shall be reasonably smooth. Sharp edges shall be rounded to a minimum radius of 3mm. Runners, risers, fins, and other useless cast-on pieces shall be removed by the Manufacturer prior to the delivery of the casting to the coating applicator. All castings shall have the Manufacturer's name (identification marks) distinctly cast upon them and such other information as requested throughout these Specifications. The City Engineer may reject any casting at the Manufacturer's yard or at the coating applicator's yard, which in their opinion does not conform to these requirements.

503.02.03 Ductile Iron Pipe

Ductile iron pipe shall conform to the AWWA C151 ***(latest edition)*** and shall be cement mortar lined in accordance with AWWA C104 ***(latest edition)***. Where seal coat is applied to the mortar lining, the coating shall be NSF61 listed. Ductile iron pipe shall be minimum Pressure Class 350. Unless otherwise specified the pipe shall be supplied with bell & spigot ends complete with continuous, molded rubber-ring NBR (Nitrile) gaskets conforming to the AWWA C111 ***(latest edition)***. Ductile iron pipe shall be supplied with copper conductivity strips "Conductoflex" approved equal welded to the bell and spigot c/w jumper strip/wire, nuts and bolts, ***or as approved by Engineer.***

Where conductivity strips are not supplied with the pipe, continuity across joints may be provided in the field with a #10 RWU cable thermite welded to the bell & spigot as shown on Std. Dwg. 453.1008.003, Sheet #10. Ductile iron pipe shall be eternally coated as specified in Sec. 505.02.00.

The pipe Manufacturer, Distributor, and Installer shall ensure that the bell and spigot end of each pipe length remain sealed in a manner acceptable to the Engineer to prevent contaminants from entering the interior of the pipe from the time of manufacture to the time of installation.

The minimum class and wall thickness for coated ductile iron pipe for use under cathodic protection shall be as follows:

Size of Pipe (mm)	Pressure Class	Wall Thickness mm (")	* Class 53 for Threading
100	350	6.4 (.25")	8.1 (.32")
150	350	6.4 (.25")	8.6 (.34")
200	350	6.4 (.25")	9.1 (.36")
250	350	6.6 (.26")	9.6 (.38")
300	350	7.1 (.28")	10.1 (.40")
400	350	8.6 (.34")	10.9 (.43")

*Ductile iron pipe for use with thread-on flanges or in grooving applications shall be Special Class 53, as specified in AWWA C115 /A21.15***(latest edition)**

503.02.04 PVC Pipe

Polyvinyl chloride (PVC) pipe shall be cast iron O.D. with bell and spigot ends. All pipes shall be supplied with integral wall thickened bell ends and continuous gaskets. Gaskets shall be SBR, EDPM, or NBR of a pressure actuated seal design (optional for 400mm pipes). PVC pipe for installation in industrial areas, new gas station sites or other potential risk locations as designated by the Engineer shall be supplied with Nitrile (NBR) gaskets.

The use of butt fused jointless Fusible PVC pipe is limited to open cut and carrier pipe installations unless otherwise approved by the Engineer.

PVC pipe shall not be installed in areas known to be contaminated by organic solvents or petroleum products, i.e. near existing buried petroleum fuel tanks, storage areas, refinery sites or abandoned gas stations.

PVC pipe shall conform to the following:

Pipe Size	Dimension Ratio (DR) / Pressure Class	Conform / Certified
100mm*	14 / 305	AWWA C900 CSA CAN 313 137.3
150-300mm	18 / 305	AWWA C900 CSA CAN 313 137.3
400-500mm	18 / 235	AWWA C900 CSA CAN 313 137.3

PVC pipe and fittings without signs of fading or UV degradation shall be considered acceptable up to 48 months after the marked production date, provided the gasket materials are in good order. Where such materials contain non-replaceable integral gaskets such as a Rieber style, that are cracked or no longer pliable, the pipe or fitting may be rejected at the discretion of the Engineer regardless of the visual appearance of the pipe or fitting.

PVC pipe of fittings that show evidence of severe UV degradation with a production date of more than 24 months previous shall not be installed unless individually re-certified in writing by the Manufacturer. This may be done on site by the Manufacturer's representative based upon their Inspection. Where this does not satisfy the concerns

of Engineer, the Engineer may request further re-certification of a pipe lot based on re-performance of the in-plant QC testing of a representative pipe selected by the Engineer from the lot in question. In-plant testing shall consist of a full pipe burst test, followed by an impact and flattening test as per AWWA C900.

PVC pipe or fittings deemed by the Engineer to require Manufacturer re-certification shall itemized on an Inspection Report and marked with a black permanent marker at the following locations on the pipe: longitudinally at each end and mid pipe at opposing sides of the pipe circumference. Markings shall be 100mm in height. The Mark shall be an "X" followed by the IR number, date in YY/MM/DD format, Inspectors initials and Subdivision Phase or job site address. Where multiple items are rejected on the same IR Report, the IR Report number mark shall be followed by a dash and the individual item number.

Upon re-certification by the Manufacturer, the Manufacturer shall permanently mark the pipe below the Inspectors mark with their re-certification identifier and provide written documentation to the Purchaser which includes/correlates to the City Inspectors Markings. This re- Certification document must be provided for each re-Certified pipe or fitting and produced at the request of the City Inspector prior to a re-certified pipe being installed at any site.

The use of 100mm PVC pipe is restricted to residential cul-de-sacs. A minimum pipe size 150mm or larger, as required, shall be installed to the approved location on a cul-de-sac c/w a 150mm valve. Beyond this point the pipe may be reduced to 100mm. The Engineer shall approve all usage of 100mm pipe.

PVC pipe shall be certified under the CSA or by an SCC accredited testing organization. The interior of the pipe shall be clean and no debris or PVC shavings shall be trapped inside the pipe. The pipe Manufacturer, Distributor, and Installer shall ensure that the bell and spigot end of each pipe length remain sealed in a manner acceptable to the Engineer during the transportation and storage of the pipe. The purpose of the end-seals is to prevent contaminants from entering the interior of the pipe from the time of manufacture to the time of installation.

Pipe-ends shall be sealed with suitable plastic caps, or with black (UV stable), 6 mil (0.15mm) thickness, linear low-density polyethylene bag. Bags shall be placed over the ends of the pipe section and firmly taped down (6 wraps min.) with 25mm wide, 12 mil (0.3mm) thick, black, Polyken 900 (or approved equal) tape. Bags shall have the following dimensions:

Nominal Pipe	Polyethylene Bag Size	
Size (mm)	Width (mm)	Depth (mm)
100	260	330
150	360	380
200	460	510
250	560	580
300	660	640
400	860	760

503.02.05 Polyethylene (HDPE) Pipe

Polyethylene pipe and fittings shall conform to the AWWA C906 ***(latest edition)*** and shall be PE 3408 ***or 4710 DR11 with a minimum*** working pressure rating (WPR) 160 psi, unless otherwise approved. HDPE pipe for potable water use must be identified by blue longitudinal striping or a blue outer-shell. The outside diameter (OD) shall conform to ductile iron (DIPS) or iron pipe size (IPS) as approved by the Engineer.

The use of HDPE in potable water systems is limited to special applications, such as trenchless, carrier or transmission pipe installations. HDPE project design shall conform to the design principles outlined by AWWA M55 Design Manual.

Drawings shall show details of the fusing method of each joint, thrust restraint details, the location of standard or special fittings, and complete connection/closure details at proposed tie-ins. These drawings shall be submitted and approved by the Engineer prior to construction. See Std. Dwg. 453.1031.004, Sheet #58 for details on pipe restraints.

HDPE pipe for these applications shall be Driscoplex by CP Chemical Performance Pipe, KWH Sclairpipe, PolyPipe by CS Rinker, WL Plastics, Flint Global Poly, or an approved equal. Electro-fusion fittings and processors shall be Friatec, Central Plastics, Plasson, Tega, Elofit, or an approved equal. The design and installation of HDPE must be in compliance with the manufacturer's guidelines. HDPE fusion joints shall be made by factory trained or industry certified personnel using appropriate equipment, procedures, and fittings.

Operator certifications for each fusing method employed on a project shall be presented for inspection and shall have a date no more than one calendar year previous to be considered valid. All butt and electro-fusion shall be performed in the presence of the Engineer unless otherwise approved. Microprocessor fusing logs shall be submitted to the Engineer for every butt fuse made, and for each electro-fuse fitting where used. Butt fusing shall not commence on site until the Fusing Operator has successfully completed a "Bent Strap" test (as per the Plastics Pipe Institute Handbook) to the satisfaction of the Engineer.

The pipe Manufacturer, Distributor, and Installer shall ensure that the bell and spigot end of each pipe length remain sealed in a manner acceptable to the Engineer during the transportation and storage of the pipe. HDPE pipe shall not be installed in areas contaminated or potentially contaminated with volatile organic compounds (organic solvents or petroleum products).

503.02.06 Steel Pipe

Steel pipe for bypass or alteration piping shall conform to ASTM Specification A53, standard wall, with an approved end preparation for field welding ***or grooved joint ends***, as shown on Std. Dwg. 453.1020.005, Sheet #47. Fittings shall be standard weight seamless or welded with beveled ends for butt welding. Flanges shall be 150 lb. forged ASA type. Steel pipe shall be coated and lined to the following specifications:

Lining: Cement mortar conforming to AWWA C205, Type A internal coating or a NSF61 listed 100% solids epoxy as approved by the Engineer.

Coating: Approved extruded polyethylene outer jacket system, Type "A" coating system as per Sec. ***505.01.02***, NSF61 listed 100% solids epoxy, P.E. tape or other coating system as approved by the Engineer.

The pipe Manufacturer, Distributor, and Installer shall ensure that the bell and spigot end of each pipe length remain sealed in a manner acceptable to the Engineer during the transportation and storage of the pipe.

503.02.07 Hydrants

Hydrants shall be ULC (Underwriter Laboratories of Canada), UL (Underwriter Laboratories, US) or FM (Factory Mutual Fire Insurance Company) approved and shall also conform to the AWWA C502 ***(latest edition)*** and Sec. 503.02.02 of these Specifications. Hydrants shall be dry-barrel compression type supplied with an inlet elbow bell-end sized for 150mm cast iron pipe O.D. Hydrants shall be supplied with a frangible (break-away) connection at the grade line flange.

Unless otherwise specified, hydrants shall be supplied with continuous, molded rubber-ring gaskets conforming to the AWWA C111 ***(latest edition)***.

NBR (Nitrile) gaskets shall be supplied for hydrants which will be installed in areas contaminated or potentially contaminated with volatile organic solvents or petroleum products, i.e. near buried petroleum fuel tanks, abandoned gas stations, petro storage areas or petro refinery sites.

Hydrants shall be of the "Dry-Top" design with a totally enclosed chamber for the operating mechanism, sealed with O-rings. The operating housing shall be a mineral or silicone-based NSF H1 Food Grade grease lubricated.

Outlet nozzles shall be fastened into the barrel by a threaded or approved bayonet connection. The drain valve shall close as the compression valve starts to open. The interface between the removable parts of the main valve assembly and the hydrant body shall be bronze to bronze. The operating nut shall be 32mm^2 (1 1/4 in^2) and shall turn counter-clockwise (left) to open.

All hydrants shall have two (2) hose connections 57mm (2 1/2") in size at 180 degrees with Alberta Mutual Thread and 114mm (4 1/2") pumper connection to the following thread detail:

- 4 threads per 25.4mm
- 154mm O.D.
- Root 145mm with 0.51mm flat top and bottom

The hose connection outlets shall be supplied with cast iron caps, factory lubricated for ease of removal. The caps shall <u>not</u> be secured to the hydrant body with chains or cables.

Hydrants shall be supplied with a single 150-600mm barrel and stem extension located immediately below the grade-line flange except where approved by the Engineer and shall have a minimum of one stem guide (spider) if the cross-sectional area of the operating stem is less than 1000mm^2 (1.5in^2). The dimension from the grade line flange to the center-line of the lowest outlet nozzle shall be a minimum of 400mm. ***Hydrants are limited to a <u>maximum</u> of two extensions with the top extension being limited to a 150-600mm extension. If two extensions are installed, the smaller extension must always be installed closest to final grade.***

The interior of the hydrant shall be factory coated with an NSF 61 listed epoxy coating in conformance to AWWA C550 ***(latest edition)***. The exterior of the hydrant above and 300mm below the grade line flange shall be color coated in accordance with Section 505.01.00 (Type C) in the following colors:

- BrightGreen Body: C.I.L. #3486,Valspar20-G-684, Cloverdale Hydrant Yellow base #11187, ICI 634-2017, or approved equal
- Hydrants on non-potable and reclaimed water systems shall be painted purple (Pantone 522 C, RAL 320 70 25)) with black caps
- Black Caps and Top: Cloverdale #11107, or approved equal

The exterior of the remaining buried hydrant barrel shall be coated in accordance with Section 505.01.00 (Type A or B).

The Coating Applicator shall ensure that all threads, including those on outlet nozzles are protected from the sandblasting and coating procedures. After the coating application the Coating Applicator shall remove all sand from threads & restore the lubricants on all nozzles and cap threats. Electrical continuity shall be maintained between all exterior parts of the hydrant.

The depth of bury shall be defined as the distance from the invert of the suction elbow to 50mm below the underside of the grade line flange.

It is a requirement under these specifications that an approved hydrant manufacturer maintain an adequate supply of hydrant parts at a Calgary distribution center. Failure to comply with this requirement will result in the removal of the hydrant from the approval list under Sec. 503.01.00.

503.02.08 Distribution Valves

General

All distribution system valves shall be resilient seat unless otherwise approved. Valves shall be equipped with a 50mm square operating nut and shall turn clockwise (right) to open unless otherwise specified. This direction of operation is by convention indicated by a red painted top nut installed at the factory. Direction of operation should always be verified prior to installation.

Working pressure shall be 1380 kPa (200 psi) for valves 300mm and smaller, and 1030 kPa (150 psi) for valves 400mm and larger. The stem seal shall be of an O-ring or other pressure actuated seal design.

All resilient seated line & tapping valves shall be ULC, UL or FM approved and shall also conform to the AWWA C509 ***(latest edition)*** or AWWA C515 ***(latest edition)*** and Section 503.02.02 of these Specifications. Valves shall be either cast or ductile iron body, resilient rubber seated disc style with non-rising stem. The interior (ferrous parts) of the valve shall be factory coated with an NSF 61 listed epoxy coating and conform to AWWA C550 ***(latest edition)***.

All valves shall be supplied with a circular bottom box guide plate. Metallic type guide plates shall be coated in accordance with Section 505.01.00 (Type A). The guide plate shall be located below the operating nut and shall be designed to center the operating nut inside the designated bottom box. The dimensional details of bottom boxes are shown on Std. Dwg. 453.1006.006, Sheet #4 and Std. Dwg. 453.1006.009, Sheet #5. Unless otherwise specified, valves shall be supplied with continuous, molded rubber-ring gaskets conforming to the AWWA C111 ***(latest edition)***. The exterior of all buried distribution valves shall be factory coated in accordance with Sec. 505.01.00 (Type B) or as approved by the Engineer

NBR (Nitrile) gaskets shall be supplied for valves which will be installed in areas contaminated or potentially contaminated with volatile organic compounds (organic solvents or petroleum products), i.e. near buried petroleum fuel tanks, abandoned gas stations, petro storage areas or petro refinery sites.

Line Valves

Unless otherwise approved by the Engineer, line valve ends shall be bell type suitable for push on single rubber gasket joints. The gaskets shall be supplied with the valve and the cost of the gaskets shall be included in the cost of the valve. Line valves shall be approved resilient seated gate valves, conforming to the AWWA C509 ***(latest edition)*** and Sec. 503.02.02 of these Specifications. Valves shall be epoxy coated externally in accordance with AWWA Standard C550 ***(latest edition)*** and coated internally with an approved NSF 61 listed epoxy coating.

Flanged and Tapping Valves

Unless otherwise approved by the Engineer, flanged and tapping valves shall be supplied with a flat face flange (without a spigot alignment ring) conforming in dimensions and drillings to ANSI B16.1 class 125 or AWWA C110 ***(latest edition)*** Standards, and where specified, a bell type end suitable for push on single rubber gasket joints. Bell-end gaskets shall be supplied with the valve and the cost of the gasket shall be included in the cost of the valve.

Non-isolating flange gaskets shall be an EDPM or Nitrile, NSF61 listed rubber compound, full-faced, multiple integral O-ring style, 3.18mm thick. Isolating flange kits, where required, shall be ***as per 503.01.00 (8)***.

503.02.09 Distribution Valve Operating Assembly

For 100 to 400mm valves, the valve rod, top box, valve box adapters, valve lids, casing and bottom box shall conform to Std. Drawings: Sheet #4, Sheet #5, Sheet #6, and Sheet #19.

Valve top boxes and lids for use on Stormwater irrigation systems shall be purple FBE coated (Pantone 522 C or RAL 320 70 25) and valve rods shall be supplied with Trojan SVBTN operating rod top nuts or approved equal.

503.02.10 Pressure Reducing Valves

Pressure reducing valves shall maintain a constant downstream pressure regardless of varying inlet pressure. Pressure reducing valves shall be cast or ductile iron body with flat face flanges conforming in dimensions and drillings to ANSI B16.1 and class 125 or AWWA C110 ***(latest edition)*** equipped with a hydraulically operated, diaphragm-actuated, globe valve assembly. Valve body castings shall conform to Sec. 503.02.02. They shall include stainless steel trim seats, an external position indicator, and 6mm petcocks on the inlet and outlet side of the valve. A separate petcock shall be supplied on the inlet & outlet side of the valve to accommodate pressure gauges. The pilot control system shall have an external strainer and direct acting, adjustable, spring loaded, normally open diaphragm valve with an all-stainless steel or brass body, c/w stainless steel or brass bolts. Pressure reducing valves with optional flow monitoring capability shall be preferred.

503.02.11 Check Valves

All check valves shall conform to the AWWA C508 ***(latest edition)*** and Sec. 503.02.02; they shall be iron-body bronze mounted swing check valves. Disc hanger pins***/shaft*** shall be stainless steel, and cover nuts and bolts shall be stainless steel or zinc plated. Check valves located between two pressure zones shall be supplied with an outside lever and weight. Check valves on private sites shall not be equipped with lever and weight.

503.02.12 Fittings

Cast and Ductile Iron Fittings

Cast and ductile iron full body fittings for use in chambers or direct bury, (i.e. tees, crosses, bends and reducers) sizes 100mm to 400mm shall have bell- ends conforming to the AWWA C110 ***(latest edition)*** and Sec. 503.02.02 of these Specifications. Flanges, where approved, shall conform in dimensions and drillings to ANSI B16.1 class 125 or AWWA C110 ***(latest edition).***

Compact ductile iron fittings conforming to AWWA C153 ***(latest edition)*** shall be permitted for direct bury use only. Flanges, where approved, shall conform in dimensions and drillings to ANSI B16.1 class 125 or AWWA C110 ***(latest edition)***. Non-isolating flange gaskets shall be an EDPM or Nitrile, NSF61 listed rubber compound, full-faced, multiple integral O-ring style, 3.18mm thick.

The exterior and interior of all fittings shall be fusion bond epoxy or approved equal coated in the factory or by an approved third-party coating facility in accordance with AWWA C116 ***(latest edition)*** and Section 505.01.00 (Type A) of these Specifications. Interior coatings shall be NSF61 listed.

Unless otherwise specified, all fittings shall be supplied with continuous, molded rubber-ring gaskets conforming to the AWWA C111 ***(latest edition)***. All castings shall conform to Sec. 503.02.02.

NBR (Nitrile) gaskets shall be used where fittings are to be installed in areas contaminated or potentially contaminated with volatile organic compounds (organic solvents or petroleum products), i.e. near buried petroleum fuel tanks, abandoned gas stations, petro storage areas or petro refinery sites.

Polyvinyl Chloride (PVC) Fittings

PVC injection-molded fittings, i.e. tees, elbows, tapped couplings (AWWA thread), sizes 100 - 300mm, line & repair couplings, reducers and plugs, sizes 100 - 300mm shall be Class 150 conforming to UNI-BELL B-12-87 Standard and AWWA C907 ***(latest edition).***

Tees, elbows, tapped (AWWA thread) couplings and reducers sizes 100 - 200mm shall also conform to CAN/CSA - B137.2 ***(latest edition).***

Fittings shall be supplied with continuous (joint less) elastomeric gaskets. All gaskets for PVC fittings shall be of a pressure actuated seal design. PVC extruded fittings, i.e. long body 5° elbows, sizes 100 - 400mm shall be Class 150, DR 18, conforming to AWWA C900 ***(latest edition)***. PVC fittings shall not be installed in areas contaminated or potentially contaminated with volatile organic compounds (organic solvents or petroleum products), i.e. near buried petroleum fuel tanks, abandoned gas stations, petro storage areas or petro refinery sites.

503.02.13 Tapping Sleeves

General

Tapping sleeves shall be either a mild steel split body type, or a stainless-steel full wrap gasket style with integral flat face flanges (without spigot alignment grove), conforming in dimensions and drillings to ANSI B16.1 class 125, or AWWA C110 ***(latest edition)***. They must be available for all nominal pipe sizes between 100mm and 400mm and shall accommodate PVC, Cast Iron, Rough Barrel Asbestos Cement Class 150, and Standard Steel pipe.

They shall have a 20mm (3/4") NPT test plug for pressure testing; have permanent identification marking identifying the Manufacturer's name, nominal size, & O.D. range, and shall be packaged as a complete unit (i.e. sleeves, gaskets, nuts and bolts). The tapping sleeve Manufacturer shall supply complete installation information including bolt torques.

The tapping sleeve installer shall follow the installation and bolt torque procedure outlined in the product installation guide and shall demonstrate the proper bolt installation torque with a torque wrench at the Engineer's request. Tapping machines with an auto-feed drive shall not be advanced at more than 60 rpm on any non-metallic mains.

NBR (Nitrile) gaskets shall be supplied for tapping sleeves which will be installed in areas contaminated or potentially contaminated with volatile organic solvents or petroleum products, i.e. near buried petroleum fuel tanks, abandoned gas stations, petro storage areas or petro refinery sites.

Stainless Steel Tapping Sleeves

All metallic parts of the stainless-steel tapping sleeve shall be fabricated from 18-8 Stainless Steel, Type 304 or Type 304L. Fastening system shall incorporate a reversible free bolt bracket design. All surfaces including weld areas shall be thoroughly cleaned of scale, grease (oil) and other contaminants. Sensitized stainless steel is not acceptable. Bolts shall be 16mm (5/8") SS with hex-nuts, NC rolled threads, lubricated (coated) to prevent galling. These sleeves are approved for use on all pipe materials for all taps up to 400mm including "size on size" taps (branch size same as main). For "size on size" taps on Asbestos Concrete, Cast Iron, or PVC pipe, a 12.5mm undersized cutter must be used.

For "size on size" taps on 400mm PVC pipe, a 350mm cutter shall be used. Fully 304 stainless steel construction tapping sleeves are exempted from cathodic protection and field taping requirements.

Mild Steel Tapping Sleeves

The mild steel tapping sleeve shall be supplied with 20mm (3/4") mild steel or stainless-steel bolts, NC heavy-hex nuts. The tapping sleeve, including nuts & bolts shall be coated in accordance with Sec. 505.01.00 (Type A). Coated flange faces shall be supplied with EDPM or Nitrile, NSF61 listed rubber compound, full faced, multiple integral O-ring style gaskets, 3.18mm thick. These sleeves are approved for use on metallic main for taps up to 400mm, excluding "size on size" taps on Cast Iron. These sleeves may also be used on PVC main up to 300mm in diameter provided that the outlet size is a full pipe size less than the main (i.e. 250mm). Size on size tapping with this type of sleeve on PVC main is not permitted. Tapping of AC pipe with this type of sleeve is not permitted.

Where these sleeves are installed on existing unprotected bare metallic mains, electrical continuity to the existing main shall be established by means of a bonding wire.

503.02.14 Couplings

General

Product Specifications: The Manufacturer shall supply complete cataloging of couplings including product Specifications and selection charts. The selection chart shall provide detailed information on the selection of end-plates, gaskets and boots relative to various pipe OD's.

Coating: The body sleeve, end plates and bolts, (except flange faces and stainless-steel nuts & bolts) shall be factory coated in accordance with Section 505.01.00 (Type A) or as approved by the Engineer. Electrical conductivity must be provided between all metallic parts of the coupling. Electrical conductivity between bolts and end plates shall be provided by removing the coating from the bolt nut, bolt head and end-plate bearing area. Alternate electrical conductivity designs must be approved by the Engineer. Refer to Section 505.03.03 for field coating requirements.

Isolating Boot:

Isolating boots shall be made of molded rubber conforming to the latest issue of the ASTM D2000, AA615, B13 compounded to have good insulating properties. Isolating boots shall protrude a minimum of 25mm outside the end of an assembled coupling and shall have at least the following minimum dimensions:

Skirt		Lip	
Length	Thickness	Depth	Thickness
135mm	3.1mm	12.7mm	15.2mm

Markings:

Permanent identification markings shall be provided as follows:

Body and Sleeve:	Manufacturer's name and nominal size
Endplate and gasket:	Manufacturer's name, OD, range, & other markings or color code as required by the manufacturer
Boot:	Manufacturer's name & OD

Gaskets:

Unless otherwise specified, couplings shall be supplied with continuous, molded rubber-ring gaskets conforming to the requirements of ASTM D2000. NBR (Nitrile) gaskets shall be supplied for couplings to be installed in areas contaminated or potentially contaminated with organic solvents or petroleum products, i.e. near buried petroleum fuel tanks, abandoned gas stations, petro storage areas or petro refinery sites.

Bolted Sleeve-Type Couplings

Materials: Unless otherwise specified bolted sleeve-type couplings shall conform to the AWWA C219 ***(latest edition)***. Sleeves and endplates shall be made of ductile iron conforming to ASTM A536. Each endplate shall be provided with one 6mm, SAE J429 Grade 5, NC cadmium plated set-screw to provide for electrical continuity between the endplate and sleeve. Integral anode connection lugs must be approved by the Engineer. The minimum bolt diameter shall be 5/8" (16mm). Bolts and nuts shall be made of stainless steel or coated low alloy steel with NC threads and heavy hex nuts conforming to the AWWA C111 ***(latest edition)***.

Couplings shall comply with the following minimum sleeve length, weight, and bolt assemblies unless otherwise approved by the Engineer:

Nominal Size (mm)	Minimum Sleeve Length (mm)	Weight (kg)	Min Number of Bolts
100	180	9.0	4
150	180	14.9	4
200	180	17.7	6
250	180	28.1	6
300	180	34.1	8
400	180	48.5	10

Couplings shall be available for all nominal pipe sizes, i.e. 100mm to 400mm inclusive to accommodate: Cast Iron; Rough Barrel Asbestos Cement Class 150 and Standard Steel Pipe. End-plates shall be designed to provide the best possible back up support for the gaskets.

Couplings constructed of all stainless steel (grade 304 min) are exempted from cathodic protection and field taping requirements.

Flange Coupling Adapters

Material: The body and end plates shall be made of ductile iron conforming to ASTM A536. Bolts shall be 304 stainless steel with; hex-nuts, NC rolled threads, lubricated (coated) to prevent galling. Bolt diameter shall be 16mm (5/8") for 100mm (4") couplings, 20mm (3/4") for 150 & 200mm (6" & 8") couplings and 22mm (7/8") for 250 & 300mm (10" & 12") couplings unless otherwise approved by the Engineer.

Coated flange faces shall be supplied with EDPM or Nitrile, NSF61 listed rubber compound, full-faced, multiple integral O-ring style gaskets, 3.18mm thick.

503.02.15 Electrical Isolating Elements

Unless otherwise approved, electrical isolation in a metallic distribution system shall be achieved by one of the following:

- A short length (600mm) of PVC pipe placed in line, coupled with bell & spigot joints or straight-line couplings.
- An approved isolating flange kit placed between two flanges.
- A straight-line isolating coupling placed between plain pipe-ends complete with a PVC or PE ring installed between pipe ends.

503.02.16 Sacrificial Anodes

General

All anode lead wires shall be provided with a 4m minimum of test lead protruding from the end cap which shall consist of #10, 7 stranded copper wire with type RWU-90 insulation. Magnesium anodes shall be supplied with a blue lead wire. Zinc anodes shall be supplied with a white lead wire. The lead wire shall be connected to the core with silver solder or an approved equal. The connection shall be insulated by filling the recess and any voids in the lead wire core connection with an electrical potting compound. Packaged anodes shall be supplied in a water permeable cardboard tube containing a back-fill mixture of the following composition:

Ground Gypsum - $CaSO_4 \cdot 2H_2O$	75 %
Powdered Bentonite - $Al_4Si_8O_{20}(OH)_4NH_2O$	20 %
Anhydrous Sodium Sulfate - Na_2SO_4	5 %

Back-fill shall have a grain size so that 80 to 100 percent will pass through a #20 (850 µm) screen and 50 to 60 percent will be retained by a #100 (150 µm) screen. The mixture shall be firmly packaged around the anode within the permeable cardboard tube by means of adequate vibration.

Cardboard tube size shall be sufficient to provide a minimum thickness of 8mm of back-fill material between all parts of the anode ingot and the anode packaging.

All anodes shall carry a label identifying the Manufacturer's name, type of anode, and the net weight of the anode. Cardboard tubes used to package anodes shall have sufficient strength to permit normal shipping and handling without failure.

Manufacturers of sacrificial anodes shall have their anode chemical composition, current efficiency, and back-fill material tested on a regular basis by an independent testing laboratory to ensure compliance to these Specifications.

The Manufacturer shall furnish, when requested by the Engineer, an "Affidavit of Compliance", and test results prepared by an independent testing laboratory verifying compliance to these Specifications. The back-fill material shall be analyzed using the X-ray diffraction technique for mineral identification or as other approved.

Magnesium Anodes

Magnesium anodes shall conform to ASTM B843 Grade M1C (latest edition). Anodes shall have a minimum open circuit potential of - 1.70 volts referenced to Cu/CuSO4. Minimum acceptable current efficiency is 48%. Testing of these properties shall be in accordance with ASTM G97.

These anodes shall be cast with a perforated galvanized steel core. The weight of the core shall not exceed 0.15kg per meter. One end of the anode shall be recessed so that the core is accessible for the lead wire connection.

Magnesium anodes shall conform to the following composition (limits are given as maximum weight percent unless shown as a range):

Aluminum	0.01
Manganese	0.50 to 1.3
Silicon	0.05
Copper	0.02
Nickel	0.001
Iron	0.03
Other Metallic Impurities	0.05
Manganese	Remainder

Zinc Anodes

Zinc anodes shall conform to ASTM. B418 Type II (latest edition). Anodes shall have a minimum open circuit potential of -1.10 volts referenced to Cu/CuSO4. Zinc anodes shall have the following composition:

Aluminum	0.005%	maximum
Cadmium	0.003%	maximum
Iron	0.0014%	maximum
Lead	0.003%	maximum
Copper	0.002%	maximum
Zinc	Remainder	

503.02.17 Test Points

Test points shall be assembled as detailed on Sheet #20 or Sheet 14, unless otherwise approved. Flush mount test points, where permitted, shall be as detailed and approved by the Engineer.

503.02.18 Water Service Pipe

All new water services shall be sized to meet the current minimum water service size requirements of The Canadian Plumbing Code Division B. Pre-installed residential water services shall be a minimum of 25mm in size unless otherwise approved. Water service pipe shall be:

Copper Pipe: sizes 20 - 50mm

Copper pipe shall be Type K, soft copper conforming to ANSI/AWWA C800 ***(latest edition)*** and ASTM B88. All copper pipe shall be third party certified (TPC).

PEX Pipe (Cross-linked Polyethylene Pipe): sizes 20 - 50mm

PEX pipe shall be manufactured in accordance with CSA B137.5 and ASTM F876 and shall comply with NSF 14 & 61 (PW). The degree of cross-linking for PEX pipe shall be not less than 70% when tested according to ASTM D2765, Method B. PEX pipe

shall meet CSA/ NSF approved pressure rating:

160 psi@ 23°C / 73.4° F
100 psi@ 82° C / 180° F
80 psi @ 93° C / 200° F

The outside diameter of the pipe shall be copper tube size (CTS) and must have a standard dimension ratio (SDR) of 9. PEX pipe shall be manufactured in natural color or in sky Blue (RAL 5015) and shall carry the following marks every five (5) feet (minimum): manufactures' name, nominal size, ASTM, CSA & NSF designations, SDR (standard dimension ratio), pressure/ temperature rating, potable tubing, manufacturing date & machine number and footage mark. The pipe shall have consecutive footage marks every five (5) feet (minimum) starting with zero (0) at the beginning of each coil.

503.02.19 Water Service Saddles

Materials:

Service saddles shall be constructed of stainless steel, bronze, or a combination of both. Stainless steel components shall be Type 304 or 304L. All surfaces including weld areas shall be thoroughly cleaned of scale, grease (oil) or other contaminants. Welding must be performed to prevent sensitization. Sensitized stainless steel is not acceptable.

Bronze saddle components shall be Waterworks Bronze (85-5-5-5) and conform to the ASTM Standard B62 or A40B.

Service saddles shall be available for nominal pipe sizes 100mm to 400mm and adaptable to the following pipe types and respective OD ranges:

- An approved non-Isolating Saddle shall be installed on C900 and C905 PVC and Rough Barrel Asbestos Cement Class 150 Pipe only.
- An approved Isolating Saddle shall be installed on all steel, cast iron and ductile iron pipe.

Service saddles shall be a stainless one piece or a two component (body and strap) design with fastening devices on one or both sides of the outlet. The body shall be heavy cast stainless steel or cast bronze tapped with AWWA taper (CC) threads; stainless steel straps with 13mm stainless steel bolts & nuts with NC rolled threads lubricated to prevent galling.

Gaskets shall be adequately secured to metal components to resist shifting. ***All*** gaskets shall be Nitrile (NBR) for water services ***and saddles***. Isolating ***NBR*** gaskets shall be ***an*** isolating compound of high dielectric strength and low water absorption and shall prevent the metallic saddle components from contacting the pipe. ***Saddle gasket openings*** shall be the same as the nominal diameter of the saddle outlet. Gaskets shall extend 6mm minimum beyond the saddle components edge. Service saddles shall conform to the following table:

Nominal Pipe (mm)	Nominal Outlet (mm)	Strap Type	
		Non-Isolating	Isolating
100,150	20	D,SW	SW
100,150	25	D,SW	SW
100	40,50	D,SW	SW
150	40, 50	D,SW	SW
200	20,25,40,50	D,SW	SW
250,300,400	20,25,40,50	D,SW	SW

Where:

S Single strap minimum width 45mm with two (2) fastening devices, one on each side of the outlet.

D Double strap, (two single straps) minimum width of 45mm each, complete with four (4) fastening devices, two (2) on each side of the outlet.

SW Single wide strap, minimum width of 100mm c/w four (4) fastening devices, two (2) on each side of the outlet for two component bronze and stainless saddles. All stainless one-piece saddles shall use a minimum of two fasteners on pipe up to 200mm and a minimum of four fasteners for 250mm and above pipe.

Markings:

The following permanent identification markings shall be provided: Manufacturer's Name, OD Range and Type (Isolating or Non-Isolating).

503.02.20 Main Stops

Main stops shall be of brass construction (brass or stainless-steel ball type) listed under the NSF 61 Standard and conforming to AWWA C800-01 Standards with AWWA (Mueller) threads on the inlet and compression type connection on the outlet end.

The compression ends shall be designed with a "limited travel" compression nut to prevent over-stressing (necking down) the service pipe. ***Direct main stops are to be used only on non-metallic pipe. In the case of a metallic pipe, an isolating saddle with main stop is to be used.***

503.02.21 Service Valves

Service valves 50mm and smaller shall be of brass construction listed under the NSF61 Standard and conforming to AWWA C800 ***(latest edition)***. Unless otherwise specified by the Engineer service valves shall be the non-draining type.

The service valve shall be a "full port" ball design supplied with a suitably coated brass or stainless-steel ball with compression type ends. The operator shall have a minimum thickness of 9.6mm with a hole diameter of 7mm centered 8mm from the base

The compression ends shall be designed with a "limited travel" compression nut to prevent over-stressing (necking down) of the service pipe.

503.02.22 Service Valve Operating Assembly

The casing, top and bottom box shall conform to Std. Dwg. 453.1033.001, Sheet #26. The operating rod shall be supplied as a single unit as detailed on Std. Dwg. 453.1006.015, Sheet #25. The Manufacturer's name shall be embossed onto the clevis. The cotter pin shall be slightly bent to prevent it from falling out during transport. For 20mm & 25mm service valves the Type A operating rod shall be used and for 40mm & 50mm service valves the Type B operating rod shall be used.

503.02.23 Isolating Flange Kit

Isolating flange kits shall be designed to fit flat face flanges conforming in dimensions and drillings to ANSI B16.1 class 125 or AWWA C110 ***(latest edition)***. Gaskets shall be type "E", G-10, 3mm thick, epoxy glass, c/w NBR O-rings or seal rings imbedded on opposite sides of the gasket, or full faced NBR sealing surfaces. Where supplied, the O-ring placement shall be compatible with the flanges used.

The kit shall include sleeves of G-10 epoxy glass material c/w two G10 washers and two zinc plated steel washers per sleeve, sized to permit clear passage of the bolt sleeves through the washer bore.

503.02.24 Joint Restraints

Concrete thrust blocks shall be provided for all tees, bends, plugs, reducers, and hydrants as detailed on Std. Dwg. 453.1003.007, Sheet # 42 and where specified throughout these Specifications. When approved by the Engineer, approved joint restraints may be used in addition to thrust blocks in high traffic areas where time is of the essence and back-filling must be carried out immediately in order to restore traffic.

Under no circumstances shall the joint restrainer be used as an alternate to thrust blocks.

Each joint restraint bolt shall be protected by an approved zinc anode cap meeting ASTM B418. Anode caps shall be 6 oz. for up to and including one inch bolts and shall be 14 oz. for bolts above one inch in diameter.

All non-coated threads and bolting surfaces on joint restraints, excepting anode caps, shall be wrapped with an approved petrolatum mastic, paste and tape as listed in section 505.03.00 of the Specifications.

503.02.25 Handling and Storing of Materials

General

Pipe, fittings, valves, hydrants, and accessories shall be loaded, unloaded, and lowered into the trench using adequate lifting and rigging equipment satisfactory to the Engineer. Under no circumstances shall such material be dropped, piled, or rolled in such a way as to cause excessive impact. The handling and moving of all materials shall be kept to a minimum. Damaged coating or lining shall be repaired to the satisfaction of the Engineer at no cost to the City. Coated metallic pipe and Polyvinyl Chloride (PVC) pipe shall not be stored in a manner that exposes the pipe to direct sunlight for a period in excess of twelve (12) months.

PEX pipe shall be shipped and stored in protective cardboard boxes. PEX shall not be stored in such a manner as to cause exposure to direct sunlight for periods in excess of three (3) months. If it is necessary to store the pipe in excess of this period, the Contractor shall at no cost to the City, provide a suitable cover (canvas of other opaque

material) to protect the pipe from the sun. A minimum of 75mm of air space shall be provided between the pipe surface and the cover to prevent heat buildup.

Ductile Iron and Steel Pipe

Coated ductile iron and steel pipe shall be handled and placed using wide slings and padded cradles of canvas, leather, or other suitable material to prevent damage to pipe and coating. The use of bare metal cables, chains, hooks, or other equipment that may cause damage to coatings will not be permitted. Coated pipe shall be supported on sandbags or suitable wooden blocks. When it is necessary to walk on coated pipe, soft-soled shoes shall be used.

Concrete Pipe

This clause pertains to high-pressure concrete cylinder pipe manufactured in accordance with AWWA C301 and AWWA C303 ***(latest editions)*** as supplied by Hyprescon, Ameron or others. Concrete pipe may not be placed directly on the ground. Suitable support such as sandbags, tires or timber shall be used. Timber blocking may be required when the pipe is placed on soft or sloping ground and in locations where local activity or vandalism could be a problem.

Stacking of concrete pipe will not be permitted. Interior pipe bracing shall not be removed until after the pipe has been placed in the trench and back-filled.

Joint gaskets which form part of the pipe shipment shall be stored flat in an area which is clean and dry, free from dirt, oil, grease, solvents and not exposed to sunlight.

504.00.00 EXCAVATION AND INSTALLATION

504.01.00 General Site Practices

504.01.01 Environmental Protection - Erosion and Sediment Control

All construction activities shall be performed in an environmentally responsible manner as required under the City of Calgary Standard General Conditions G.C. 4.35. Construction practices must comply with the "***Erosion and Settlement Control Guidelines***" ***(latest edition)*** and the applicable regulations outlined in the City of Calgary "Street Bylaw" and "Drainage Bylaw".

504.01.02 Excavation Permit

An excavation permit must be obtained prior to excavating any street, lane, easement, or utility right-of-way. Excavation permits are available from Calgary Roads.

504.01.03 Starting Point of Work

Work shall start at the point where the new main network will join the existing system, unless there is good reason, acceptable to the Engineer, for starting elsewhere. Where watermains and sanitary and storm sewer mains are to be installed in a given block, the order of installation shall be on the basis of depth with the deepest utility to be installed first unless otherwise specified by the Engineer.

504.01.04 Site Preparation

The Contractor shall clear the surface of the ground or road as may be necessary for the full width and length of the proposed trench and shall dispose of all refuse in a manner satisfactory to the Engineer. Topsoil shall be stripped and stockpiled at the location shown on the drawing in a manner satisfactory to the Engineer.

Shrubs and trees shall not be removed without the prior approval of the Engineer. The Contractor shall adhere to the City Tree Protection Bylaw and shall obtain written approval from the Engineer prior to commencing any work activity that may adversely impact existing trees (i.e. potential damage to branches and/or root systems).

All buildings, fences, trees, curbs, or other property which will not be removed from the right-of-way, or the work site shall be protected during the progress of the work.

Where indicated on the drawings, the Contractor shall grade the route of the water main to the elevation shown. The edges of the grade strip shall be shaped so as to provide a smooth transition between the natural ground and the graded area.

504.01.05 Excavation in Newly Re-Surfaced and Top-Lifted Roads

Refer to Sec. 304.00.00 of the Standard Specifications Roads Construction, City of Calgary.

504.01.06 Barricade Guards and Safety Provisions

The Contractor shall be responsible at all times for the safety of his work and shall conform to all governing laws and safety provisions documented in the latest publication of the Standard General Conditions, City of Calgary.

Adequate barricades, construction signs, flashing lights and guards as required shall be placed and maintained during the construction period. Excavations adjacent to major traffic arteries shall be protected with portable concrete guards as required. All spill piles, equipment and material which may obstruct traffic shall be enclosed by fences or barricades.

When deemed advisable by the Contractor or by the Engineer, a watchman shall be provided to prevent accidents, theft, and vandalism. All safety provisions including security staff as required shall be provided by the Contractor at no cost the City.

504.01.07 Standard Trench

A standard trench is defined as a trench with vertical walls at a width of three times greater than the outside pipe diameter. Unless otherwise specified the Contractor shall be responsible for all costs incurred as a result of exceeding the standard trench width.

504.01.08 Water in Excavation

The Contractor shall maintain all excavations free of standing water whether originating from rain, surface water, ground water, or from any existing utility. The Contractor will prevent any sort of contamination of new or existing potable water distribution systems. The Contractor shall manage all water in the excavation regardless of origin at no cost to the City. All ground water mitigation requires Erosion and Sediments Control (ESC) approval and may require a recommendation from a Geotechnical Consultant. All water pumped or drained from the work shall be disposed of in a manner satisfactory to the Engineer.

Water may not be discharged or allowed to enter the City storm system, sanitary sewer system or to the surface, including during rain events, without the required Drainage or De-Watering Permit. All chlorinated or potable water shall be dechlorinated to the satisfaction of the Engineer prior to discharge. Violations of applicable Federal and Provincial Acts and City Bylaws will be subject to the penalties listed therein.

Caution shall be exercised when excavating existing residential sanitary and storm services and/or mains as water services and water mains are usually located in close proximity to sanitary and storm servicing. This proximity presents a serious risk of cross contamination in circumstances where both the potable water system and the sanitary sewer system are intentionally or inadvertently opened simultaneously, such as during new installation, repair works and particularly where a water service or water main is damaged during a sewer works excavation. Should this occur, the Engineer must be notified immediately. On-site efforts to prevent potential cross contamination shall commence and be continued to ensure that no sewer effluent enters the water system. The Contractor shall comply with all direction provided by the Engineer to ensure the potable water system is protected from cross connection.

Where an open excavation exists due to on-going construction, any open sewer pipe shall be kept sealed at all times except at time of actual connection. Once the required connection(s) is made, the sewer pipe or service as well as any proximate water services and mains shall be sufficiently protected to prevent damage from debris falling from the banks of any excavation left open.

504.01.09 Amount of Open Excavation

No more than 30 meters of open excavation will be permitted in advance of pipe-laying. Back-fill operations completed to the satisfaction of the Engineer shall be within 60 meters of pipe-laying, with the exception of:

i) Distribution main replacement projects where a maximum of 30 meters between back-fill operations and pipe-laying will be permitted.

ii) Feedermain projects involving exterior welded or cement mortared pipe joints where a maximum of 120 meters may be permitted between back-fill operations and pipe laying.

Construction of poured in place valve chambers shall be in conjunction with pipe laying to minimize the time before back-filling. Within one day of laying pipe up to a valve chamber, construction of the valve chamber must commence. The floor slab of a valve chamber shall be constructed prior to any pipe, valves and fittings being supported through the valve chamber.

504.01.10 Excavation to Grade

The trench shall be excavated to the depth required so as to provide a uniform and continuous bearing and support for the pipe on solid and undisturbed ground. Bell holes shall be dug at each joint. They shall be of sufficient size to permit the joint to be made properly. Any part of the bottom of the trench excavated below the specified grade shall be back-filled to grade with approved material and thoroughly compacted as directed by the Engineer. The finished sub-grade shall be prepared accurately by means of hand tools.

504.01.11 Bracing and Shoring

The Contractor shall have sole responsibility for the design, supply, installation, maintenance and removal of temporary bracing and shoring. Shoring shall not be withdrawn until back-fill has been completed to a depth of at least 300mm above the top of the pipe. Shoring shall be removed in a manner that will avoid trench cave-in. When approved by the Engineer, timber shoring may be left in place and shall be cut off at least 600mm below the existing ground elevation or 600mm below the finished street elevation, whichever is lower. Timber shoring when left in place on the written order of the Engineer will be paid for (materials only) on a force account basis.

504.01.12 Unstable Sub-grade

Where the bottom of the trench is found to be unstable or includes ashes, cinders, refuse, organic, or other material which in the judgment of the Engineer should be removed, the Contractor shall excavate and remove such unsuitable material and back-fill with an approved material in 150mm compacted layers. The layers shall be thoroughly compacted so as to provide a uniform and continuous bearing and support for the pipe. The finished sub-grade shall be prepared accurately by means of hand tools.

The cost of additional excavation shall be included in the unit rate tendered for the installation of pipe. Imported fill material shall be paid for at the unit rate included in the schedule of quantities. Where the trench bottom consists of material which is unsuitable to such a degree that, in the opinion of the Engineer, it cannot be removed and replaced with an approved material to support the pipe adequately, the Contractor shall construct a foundation for the pipe. This foundation may consist of piling, concrete or other materials as deemed necessary, in accordance with plans prepared by the Engineer. Extra compensation will be allowed for the additional work

504.01.13 Pavement Curb & Gutter and Sidewalk Cuts & Removal

Where an excavation is to be made through pavement, curb & gutter or sidewalks, the Contractor shall first saw cut these surface facilities on each side of the proposed trench. Saw cuts through curb & gutters and sidewalks shall be made at the nearest construction joint. All pavements, sidewalks, curb and gutters removed shall be kept separate from other excavated material and disposed of in a manner satisfactory to the Engineer. The cost of pavement, sidewalks, curb and gutter removal shall be included in the unit cost tendered for installation of water main.

504.01.14 Trenching by Hand

In any location where the use of trenching machinery may cause property damage or damage to other utilities the Engineer shall have the authority to order the trenching to be carried out manually with hand-tools. The cost of hand excavation shall be included in the unit price for the installation of water mains.

504.01.15 Spill Pile

All excavated material shall be piled in such a manner as to not endanger the work and obstruct sidewalks and driveways. Hydrants, main and service valve boxes, fire and police call boxes, or other utility controls shall be left unobstructed and accessible. Gutters and natural water courses shall not be obstructed. Where it is impractical in the opinion of the Engineer to place the earth at the side of the trench it shall be removed and deposited in a location designated by the Engineer. Excavated material shall be stockpiled in a manner in accordance with the City Tree Protection Bylaws' requirements and whenever possible shall not be piled within 5 meters of trees and shrubs to avoid soil consolidation which will interfere with the natural supply of oxygen, water, and nutrient to root systems. Appropriate erosion and sediment control measures shall be employed as required, or at the request of the Engineer, and must comply with the "***Erosion and Settlement Control Guidelines***" ***(latest edition)*** and the regulations outlined in the City of Calgary "Street Bylaw" and "Drainage Bylaw".

504.01.16 Disposal of Salvaged Material

All salvaged pipe, valves, hydrants, and other manufactured material remain the property of the City of Calgary and shall not be sold, thrown away, dumped, wasted, or otherwise disposed of except as directed by the Engineer. The Contractor shall deposit such material at a location approved by the Engineer at no cost to the City.

504.01.17 Abandonment of Mains, Services, Chlorination Points and Appurtenance Piping

All piping to be abandoned shall have a minimum length of 1.0m removed ***from the abandoned line at the main***. ***All ends of the*** abandoned ***pipe*** shall then be sealed to prevent groundwater infiltration in a manner acceptable to the Engineer. ***All*** tees larger than 50mm ***on active mains*** shall be cut out and replaced with a straight section of piping unless otherwise approved. The main stop for abandoned services or chlorination points 50mm and smaller shall be removed and the tap hole sealed with a PVC slip coupling or an approved brass plug. Where approved by the Engineer, a Robar 6636AS, Ford FACC sleeve or approved equal may be used to abandon the service.

All water infrastructure, including chambers, located on private land or future private land shall be excavated and removed completely up to property line. At the property line, water infrastructure can be deemed abandoned and the procedure detailed above followed.

Where appurtenances within chambers i.e. (Check valve, PRV, Meter or Cross Connection Control assemblies) are to be permanently abandoned, the chamber and all piping and appurtenances shall be removed and replaced with a straight run of pipe. Cathodic protection shall be provided to existing live mains and piping as required under Section 504.07.00.

504.01.18 Rock Excavation

Rock excavation will be paid for when the material encountered consists of mass or bedrock or boulders of volume greater than 0.76 m^3 (1 yd^3).

Such rock excavation shall be divided into two categories, Type A and Type B, contingent upon its hardness and difficulty experienced to excavate same.

It shall be the Contractor's responsibility to demonstrate to the Engineer's satisfaction that the material cannot be removed with reasonable effort by conventional means. The Contractor may be required by the Engineer to seek out and explore planes of weakness or layering which may ease the excavation process.

Type A Rock:

Type "A" rock is defined as fractured sandstone, shale, ledge rock, siltstone, mudstone, or other rock which can be removed by the size of backhoe rated by the Alberta Road Builders Association as a Group 17 Hydraulic Excavator.

Or a material as above which can be removed with a bulldozer rated by Alberta Road Builders Association as a Group 10 Crawler Tractor with a single ripping tooth for open excavation and which in the opinion of the Engineer results in a substantial delay or decrease in the normal rate of excavation for the project and/or significant damage or wear to the excavating equipment.

Type B Rock:

Type "B" rock is defined as material that requires drilling, blasting, wedging or jack-hammering to remove, as determined by the Engineer. Rock measurements shall be based on the standard trench width as defined in Sec. 504.01.06.

504.01.19 Planned Interruption of Services

The Contractor shall not turn off valves in the existing water distribution system that would interrupt the water supply to any customer and/or fire hydrant unless it is an emergency situation (i.e. potential property damage) and is approved and witnessed by the Engineer. Planned shutdowns and controlling of watermains must be performed by Water Services crews and shall be scheduled by contacting Water Service at (403) 268-4355.

Proposed outages of water service to facilitate construction affecting Critical Water Infrastructure (defined as water mains 400mm and larger) are subject to review, approval and coordination by the Water Operations Committee. Review and approval for Critical main shutdowns may require considerable advance time (up to 1 year) to manage and are subject to existing scheduled work and distribution system operating requirements.

Customer Notification

For non-Critical water mains, when approved by Drinking Water Services, the Requesting Contractor shall give a minimum of two weeks advance written notice for any planned water outage, i.e. (test shut-down or actual construction commencement shut-down) to Downtown Core and Business Improvement Areas (formerly BRZ) customers. A map of current Downtown core and BIA areas can be accessed at Calgary.ca, or by ***going to https://cityonline.calgary.ca/***

A minimum of 5 calendar day advance written notice is required to any affected business/commercial customers outside the DT core for any planned outage, and a minimum 2 calendar day advance written notice is required to residential customers affected by a planned outage. Notices shall contain the information detailed on Sheet 48 of these Specifications.

Where scheduling circumstances require the actual work date to be revised from the approved original and notified date, Water Services must review the proposed re-scheduling and if approved, affected customers shall be re-notified of the change no later than 48 hours before commencement of the water outage.

Fire Protection and Temporary Water Supply

The Contractor shall place "Out of Order" conforming to Sheet 3 of these Specifications on all affected hydrants and shall in all instances advise Water Services when the water supply is interrupted or restored to a hydrant. Water Services will advise the Fire Department of out of service hydrants in accordance with approved City of Calgary operating procedures.

The Engineer may also require that the Contractor provide temporary water services to all affected customers at no cost to the City. Any temporary servicing provided by the Contractor shall be to the satisfaction of the Engineer. The Contractor may, at ***their*** own expense, retain the services of the Water Services to provide this function.

Headers and hoses used to provide temporary servicing shall be constructed of NSF 61 listed materials approved for the conveyance of potable water.

Temporary service systems must be disinfected to the satisfaction of the Engineer. Water Services Dispatch may be contacted by phone at 268-4355 during normal business hours.

Site Investigations and Test Shutdowns

In order for Contractors to properly identify those impacted, including highlighting critical customers (i.e. hospitals, medical facilities, and other critical water users) and other potential issues that might arise from the shutdown or controlling of a water main, Water Services offers at no additional fee to the Contractor, a site investigation prior to any proposed water main shut down or water main control. It is highly recommended that Contractors book a site investigation at least one week prior to a contemplated shutdown or water main control. If a site investigation leads to a test shutdown, the following conditions will apply:

- Where a job site involves 250mm water mains or larger, a test shutdown appointment should be booked at least a week prior to the planned start of work (Contact (403) 268-4355) for arrangements.
- Contractors shall notify Customers as outlined previously.
- Every test shutdown will be followed by a mandatory return to service flush and sample. Therefore, test shutdown appointments should be booked for at least 2 hours or more depending on complexity of the shutdown.
- Notification of Customers affected by test shutdowns is the Contractor's responsibility, including giving Notice as outlined above.

*PLEASE NOTE THAT WATER MAIN SHUTDOWNS AND WATER MAIN CONTROLS MAY NOT ALWAYS BE POSSIBLE DUE TO OPERATIONAL CONCERNS. THOROUGH SITE INVESTIGATION AND TEST SHUTDOWNS MAY ASSIST IN IDENTIFYING ANY EXISTING ISSUES OR OBSTACLES AND INFORM AVAILABLE OPTIONS.

504.02.00 Crossings and Encasements

504.02.01 Crossing of Shallow and Deep Utilities

A. General

The Contractor shall be responsible for determining the precise location and elevation of all structures and utilities and shall be responsible for notifying the appropriate representative of adjacent utilities at least one week in advance of construction as outlined in the Standard General Conditions, City of Calgary. Crossing, exposing, or excavating within 3.0 meters of any Feeder, Force, or Critical main requires an approval by the City of Calgary Water Resources. The Engineer shall witness the pre-construction location and day- lighting of the Feeder, Force, or Critical main's crown and sides unless otherwise approved, and shall subsequently attend and approve any proximity or crossing related excavation activities. The Consultant shall comply with the "Guidelines for Safe Construction in Proximity to Feedermains, Critical Distribution Mains, Sewer Force Mains and Critical Collection Mains" ***listed as "Proximity Guidelines 2015"***. https://www.calgary.ca/uep/water/specifications/water-development-resources/specifications.html or Contact Water Resources Project Engineering Underground, at 403-268-5752, for requirements.

For City administered contracts, the City will pay the unit price tendered in the schedule of quantities for the necessary alterations to utilities which intersect the line of the proposed main.

Where there is no unit price indicated in the schedule of quantities and the utility involved must make the alteration, the City will pay the Contractor an amount equal to that charged to the Contractor by the Utility plus ten (10) percent. The cost to excavate the utility to accommodate the alteration shall be included in the unit price tendered for water main installation.

Small diameter water services that in the opinion of the Engineer, can be lowered or raised sufficiently, without requiring additional cutting, will not be considered as an alteration and no additional payment will be made for this work.

B. Crossing Over Existing Utility Lines

When crossing over an existing utility which is located within 300mm below the bottom of the trench the Contractor shall hand excavate and expose the crown of the existing utility. The existing utility shall be examined in the presence of the Engineer and owner of the utility. Any damage to the existing utility shall be repaired to the satisfaction of the Engineer and the utility owner.

Before the pipe is laid the sub-grade shall be re-established with approved granular material in 150mm deep compacted layers. The finished grade shall be prepared accurately by means of hand tools. The Engineer may require that the pipe crossing be constructed as detailed on Std. Dwg. 453.1003.005, Sheet #41. The cost shall be included in the unit price tendered for installing water mains.

C. Crossing Under Existing Utility Lines

When crossing under an existing water distribution main or Feedermain, the existing main shall be supported as detailed on Std. Dwg. 453.1003.005, Sheet #41 unless otherwise approved by the Engineer. When crossing under all other shallow and deep utilities, the existing utilities shall be supported and protected to the satisfaction of the Owner of such utilities.

Where in the opinion of the Owner of the utility the bedding or back-fill material is injurious to the pipe coating, the Owner may specify that the Contractor wrap such pipe with a protective shield as listed in Sec. 504.03.04. The cost shall be included in the unit price tendered for installing water main.

504.02.02 Carrier and Encasement Pipe

The Engineer may require water-main crossings of roads, rights of way, and easements to be constructed by means of a carrier and encasement pipe. Casing spacers supplied shall be of sufficient height to ensure that the carrier pipe is supported off the encasement pipe and appropriately strength rated for the weight of carrier pipe and contents. Encasement and carrier pipe installation shall be to the following specifications:

Steel encasement pipe for metallic carrier pipe (steel or ductile iron) under cathodic protection shall be as per Sheet #15 of these Specifications. Non- metallic carrier pipes in steel and non-metallic encasements shall be installed as per Sheet #15A of these Specifications. Refer to Sheets 16 and 16A for carrier and encasement installation details with respect to reference electrodes, DC coupons, continuity bonding of RCP and encasement end seals.

Encasement Pipe:

For Auguring: Standard wall steel pipe conforming to Sec. 503.02.06 or approved equal. Coating and lining are not required.

For Open Cut: PVC SDR 35 (bell & spigot) pipe to City of Calgary Standard specifications for Sewer Construction Sec. 402.03.03 or approved equal.

The encasement pipe shall be installed as approved and the pipe zone back- filled prior to insertion of the carrier pipe.

Encasement pipe shall have the following minimum diameter:

Carrier Pipe Nominal Diameter	Encasement Pipe Nominal Diameter
150mm (6”)	300mm (12”)
200mm (8”)	400mm (16”)
250mm (10”)	450mm (18”)
300mm (12”)	500mm (20”)
400mm (16”)	750mm (30”)

End Seals:

Manufactured end seals are not required for non-metallic carrier pipe in steel encasements as per Sheet 16. The ends of the encasement pipe shall be wrapped with suitable filter fabric. See Std. Specification Road Construction, Section: 320.00.00, Separation and /or Drainage Membranes. End seals for metallic carrier pipe (steel, ductile iron) under cathodic protection shall consist of approved link seals and watertight Viscotaq end seals or approved equal as per Sheet #16.

Carrier Pipe:

Standard Wall Steel Pipe conforming to Sec. 503.02.06. The carrier pipe shall be electrically isolated from the encasement pipe with approved stainless steel casing spacers or approved non-metallic casing spacers. A spacer shall be placed at 0.3m from each end of the casing. The spacers for the remaining pipe barrel shall not exceed a separation of 3 meters.

The ends of the encasement pipe shall be sealed with approved end-seals as per Sheet 16, depending on casing and encasement materials. Sacrificial anode(s) and test point(s) are required for carrier and encasement pipes in accordance with Sheet #15 and 15A.

Standard C900 PVC Pipe conforming to Sec. 503.02.04. Carrier pipe shall be supported with approved casing spacers. A spacer shall be placed adjacent to each side of the bell & spigot joint and at 0.3m from each end of the casing.

The spacers for the remaining pipe barrel shall not exceed a separation of 3 meters. Spacers on the spigot ends shall be placed in line with the insertion mark to prevent the spigot from traveling into the bell beyond the insertion mark. This method is limited to standard C900 PVC bell and spigot carrier pipe installations less than 20 meters in length.

For installations longer than 20 meters in length using standard C900 PVC Pipe, joint restrained casing spacers, (Uni-Flange UC or approved equal), or a combination of an approved mechanical joint restraint and separate casing spacer may be used. For this method a spacer shall be placed adjacent to each side of the joint restraint and at each end of the casing. The spacers for the remaining pipe barrel shall not exceed a separation of 3 meters.

Note**:** Joint restrained casing spacers may require encasement pipe larger than listed above. Approved mechanical restraints shall be petrolatum tape wrapped and supplied c/w a 6 oz. zinc anode cap for each restraining bolt.

C900 PVC with an integral restraint system conforming to Sec. 503.02.04.

The following listing of C900 PVC carrier pipe manufactured with integral restraint systems may be used for installations of any length provided that an approved spacer shall be placed adjacent to each side of the bell and at 0.3 m. from each end of the casing. The spacers for the remaining pipe barrel shall not exceed a separation of 3 meters. Approved modular spacers may be used in this application only. Approved products are RACI and Ranger II by PSI.

PE pipe conforming to Sec. 503.02.05. Pipe joints shall be made detailed in Sec.504.04.11. The pipe shall be anchored at each end of the encasement pipe (see Std. Dwg. 453.1031.004, Sheet #58). Casing spacers are not required with PE pipe. Anchor details, special fittings and connections to other pipe materials shall be submitted to the Engineer for project specific approval.

504.02.03 Crossing of Railway Lines

When crossing railway lines, the Contractor shall obtain the necessary approval and adopt whatever crossing procedure the appropriate authority may require.

504.03.00 Bedding and Pipe Zone Backfill

504.03.01 Bedding Classification

Bedding Classifications and Bedding and Backfill Details are found on Std. Drawings 453.1003.003and 452.1005.003, Sheet #39 and Sheet #39A.

504.03.02 Bedding for Distribution Mains and Service Pipe

Unless otherwise approved, distribution mains shall be bedded with approved bedding materials as listed in Sec. 504.03.04 of this Standard, on a flat bottom trench on an earth foundation, in accordance with Sheet #39A. in a Type 1 or Type 2 installation using Class I, II, or III material achieving the compaction requirements detailed on Std. Dwg. 452.1050.001, Sheet 39A.

Where an on- site material is used in the Initial Backfill zone in accordance with Sheet 39A, approved warning tapes shall be installed 300mm above the crown of the pipe. Two tape runs shall be laid with the inner edge of each tape positioned over the opposite sides of the main. For Warning Tape specification, see Sewer Specifications, Section 402.10.03. For approved warning tapes, see Section 503.01.00.

Where service pipe is bedded using a different material than that used on the main, the common boundary of the main and service ditches shall be the transition point of the different bedding materials.

504.03.03 Bedding for Steel & Concrete Feedermains

Steel and concrete feeder main shall be bedded in accordance with the Project Specifications and The City of Calgary Water Resources Standard Specifications, Waterworks Construction. Bedding material shall be as listed in Sec. 504.03.05 of this Standard unless otherwise approved.

504.03.04 Suitable Bedding Materials

Bedding shall be of the type and class specified within the approved construction drawings and shall conform to the details shown on Drawing Sheet #39A and the following requirements:

Bedding material shall consist of hard durable particles free from clay lumps, cementation, organic material, frozen material, and other deleterious materials.

Bedding material shall conform to the embedment materials specified in ASTM D2321. Where pipe bedding materials require compaction to meet the density requirements of 504.03.08 and Sheet 39A, it shall be achieved by means of hand compaction in 150mm lifts, with final densities confirmed by geotechnical testing and documentation.

The following tables must be used in conjunction with Drawing Sheet #39A.

The bedding materials listed are divided into Class 1A, 1B, II, and III consistent with ASTM D2321 (Flexible Pipe Installation Specification). Minus 20mm bedding material is specified for pipe sizes 375mm and smaller for improved support underneath the haunches of the pipe.

Class IA - Manufactured Aggregate, open graded, clean

For Pipe 375mm and Smaller	
Sieve Size	Percent Passing by Mass
20mm	100%
4.75mm (#4)	<10%
2.5mm (#8)	<5%
0.075mm (#200)	<5%

For Pipe Larger than 375mm	
Sieve Size	Percent Passing by Mass
40mm	100%
4.75mm (#4)	<10%
2.5mm (#8)	<5%
0.075mm (#200)	<5%

Class 1B - Manufactured, Processed Aggregates; dense graded, clean

For Pipe 375mm and Smaller	
Sieve Size	Percent Passing by Mass
20mm	100%
4.75mm (#4)	10%-50%
2.5mm (#8)	<5%
0.075mm (#200)	<5%

For Pipe Larger than 375mm	
Sieve Size	Percent Passing by Mass
40mm	100%
4.75mm (#4)	10%-50%
2.5mm (#8)	<5%
0.075mm (#200)	<5%

Class II - Coarse-Grained Soils; clean or borderline clean to w/fines

For Pipe 375mm and Smaller	
Sieve Size	Percent Passing by Mass
20mm	100%
4.75mm (#4)	Varies
0.075mm (#200)	0%-12%

For Pipe Larger than 375mm	
Sieve Size	Percent Passing by Mass
40mm	100%
4.75mm (#4)	Varies
0.075mm (#200)	0%-12%

Class III - Coarse-Grained soils with fines

For Pipe 375mm and Smaller	
Sieve Size	Percent Passing by Mass
20mm	100%
4.75mm (#4)	Varies
0.075mm (#200)	12%-50%

For Pipe Larger than 375mm	
Sieve Size	Percent Passing by Mass
40mm	100%
4.75mm (#4)	Varies
0.075mm (#200)	12%-50%

The suitability of bedding material shall be determined at the sole discretion of the Engineer. The verification of in-place densities of bedding materials shall be carried out as per the procedures and requirements outlined in Section 403.03.03 "Verification of Proposed Construction Method Consistent with Design Intent" of the Standard Specifications Sewer Construction. Testing shall be performed at no cost to the Engineer, at his sole discretion as requested.

Where the bedding material, as determined by the Engineer, is injurious to a pipe coating due to size and/or gradation, or due to height of placement issues, the Contractor shall provide:

For Distribution mains and Feedermains:
The Contractor shall at his own expense wrap the pipe with: Polyken 955-40 - Pipeline Rockshield, Tape Coat - Terra Shield, Solmax- GSE RockArmour or an approved equal.

These protective coverings shall be spirally wrapped with a minimum overlap of 25m m .

504.03.05 Bedding Material for Polyethylene Coated Ductile Iron, Epoxy Coated Steel, PVC and Concrete Feedermain, PVC & HDPE Forcemain Pipe

(1) Granulite by Inland, Aggrelite supplied by Atrium Lightweight, Lightweight 730 by Brimstone Logistics, or approved equal.

(2) Compacted sand to 95% SPD conforming to Sec. 303.03.01 of the Standard Specifications Roads Construction (Dry trench only).

(3) Class 1A or 1B aggregates as per 504.03.04 with a maximum sieve size of 20mm achieving a minimum of 90% SPD when placed, or Class II material compacted as required to meet 95% SPD.

504.03.06 Special Foundation in Rock and Gravel

Ledge rock, boulders and large stones shall be removed to provide a clearance of at least 150mm below and on each side of the pipe. This is the minimum clear distance that will be permitted between any part of the pipe and the closest projection of rock, boulder, and stone.

In areas where the existing strata are predominantly gravels, such gravel shall be removed to provide a clearance of at least 75mm below and on each side of the pipe.

The sub-grade shall be established by back-filling with an approved bedding material and thoroughly compacted as directed by the Engineer so that as to provide a uniform and continuous bearing and support for the pipe. The finished sub-grade shall be prepared accurately with hand tools.

The excavation cost shall be included in the unit price tendered for installation of pipe. The cost of bedding material shall be included in the price tendered for pipe installation

504.03.07 Special Foundation in Unstable Soil

40mm Drainage gravel: May be used under the direction of the Engineer to stabilize the pipe foundation under wet trench conditions only. (See notes below.) This material shall be as listed in Sec. 402.09.00 of the Standard Specifications, Sewer Construction (Sewer Class 1A), and shall conform to the following:

Sieve Size	Percent Passing by Mass
40mm	100%
4.75mm (#4)	<10%
2.5mm (#8)	<5%
0.075mm (#200)	<5%

This material shall not to be dropped onto PVC pipe from a height exceeding 600mm or be used as bedding material for service pipe, or PVC pipe less than 400mm in size. Where smaller bedding material is to be placed on top of 40mm material, an approved geo-textile membrane shall be placed between the bedding layers to prevent migration of the finer material.

504.03.08 Pipe Zone Back-fill and Compaction

Pipe bedding zones as shown on Std. Dwg. 453.1003.003, Sheet #39A shall be back-filled with approved Class I granular material placed by machine from a height not exceeding 900mm, or by Class II, or III material placed in 150mm lifts and hand compacted as required to achieve the required density.

The material shall be deposited in the trench for the full width on each side of the pipe simultaneously. When requested by the Engineer, the joints of distribution mains shall not be back-filled until the Engineer has accepted the hydrostatic pressure testing of the joints.

Pipe zone density and compaction for distribution mains and service connection pipe shall comply with the requirements dictated by type and class of backfill materials as shown on Sheet 39A and Section 504.03.04.

All embedment materials shall be tested and certified by the Geotechnical Consultant to conform to ASTM 2321. Class I materials do not require compaction testing or submission of drop test results. For Class II or Class 111 materials, drop tests or compaction testing shall be submitted to confirm that the densities required on Sheet 39A are achieved.

504.03.09 Ground Water Plugs and Weeping Holes at Storm Manholes

The purpose of ground water plugs and weeping holes is to provide a barrier to undesirable migration of ground water in deep utility trenches and to provide for its diversion to the storm system.

Ground water plugs are to be installed where deemed necessary by the Geotechnical Consultant in areas where ground water migration must be controlled, or where directed by the Engineer. The location of installed ground water plugs shall be noted on the As Built drawing set.

Where required, the storm sewer located on the downstream side of a storm sewer manhole(s) shall be bedded and back-filled with an impervious material such as a suitable clay or Control Density Fill as per Roads Construction Standard Section 304.05.00. The plug shall extend for a minimum distance of three (3) meters in length from the manhole, unless otherwise designed and certified by the Consulting Geotechnical Engineer. A 75mm diameter weeping hole shall be made on the manhole adjacent to the incoming storm sewer(s) at an elevation at or below the invert of the incoming pipe(s).

In areas where the water main and/or the sanitary sewer are higher than the storm sewer, a plug shall also be placed in each of these trenches. A 75mm SDR 30 PVC sewer drainpipe shall be installed from the upstream side of a plug, at an elevation at or below the invert of the main(s) to connect the water main and/or sanitary sewer trenches to the storm sewer trench. All ground water plugs shall be installed as per the above specifications and as detailed on Std. Dwg. 452.1005.006, Sheet #56.

504.04.00 Installation of Pipe

504.04.01 General

Pipe interiors shall be kept clean prior to, during, and following installation. Filling, chlorination, and pressure testing of new pipe shall not proceed until the condition of the pipe is satisfactory to the Engineer.

PVC pipe shall not be installed in areas contaminated or potentially contaminated with volatile organic compounds (organic solvents or petroleum products. PVC pipe approved for installation in industrial areas or other risk of contamination locations as approved by the Engineer shall be supplied with Nitrile (NBR) gaskets. PVC pipe shall be installed in conformity to AWWA C605 ***(latest version)*** unless otherwise specified in these specifications.

When installing 150 & 200mm PVC pipe the Contractor shall install tapped PVC couplings at appropriate service locations to accommodate 40 & 50mm water service connections at flush points (Sec. 504.11.02 B). The tapped outlets on these couplings shall be plugged prior to back-fill and shall be removed after completion of the pressure testing and chlorinating procedure to accommodate the installation of service connections. The use of 100mm PVC pipe is restricted as per Section 503.02.04.

All temporary and permanent dead end mains, where permitted by the Engineer, shall require an approved flushing device. Permanent dead end mains shall be constructed with a Type A, B, or C, flushing device as shown in Standard Drawing Sheets# 61A, 61B, 61C, or an approved equal flushing device at the discretion of the Engineer.

Non-Potable Water Systems

Non-potable water systems shall comply with CSA B128.1, be clearly marked on plans and in-situ, and where connections to the distribution system are approved, must be provided with an approved air-gap.

504.04.02 Alignment and Grade

Line and grade shall be established from a surveyed offset hub-line with the use of adequate batter boards and a boning and grade rod in a manner satisfactory to the Engineer. The Contractor shall preserve all line and grade stakes and markers set by the Engineer and, if through his negligence this stipulation is not carried out, the Engineer shall have the right to charge the Contractor for all re- survey work. The Contractor shall at his own expense establish the precise location of all existing utilities which are located close to the design grade of the new main installation. These utilities shall be excavated and exposed, and their elevation recorded well in advance of the excavation and pipe laying operation.

504.04.03 Inspection of Materials prior to Installation

Coated metallic pipe shall be jeeped with a holiday detector ***with 100 Volts per mil of coating per NACE SP0188 or at the test voltage recommended by the coating manufacturer*** in the presence of the Engineer. Defective coating shall be repaired with material specified in Sec. 505.03.00 and in accordance with the Manufacturer's Specifications.

All pipe and fittings shall be examined for cracks and defects prior to installation. Defective materials shall be set aside for further inspection by the Engineer.

504.04.04 Lowering of Pipe into Trench

Proper equipment shall be used to lift and place the pipe into the trench as detailed in Sec. 503.02.29.

504.04.05 Laying of Pipe

Pipe shall be laid to the required line and grade in a manner specified in Sec.504.04.02 with the bell-end facing the direction of laying. Every precaution shall be taken to prevent foreign material from entering the pipe. When pipe-laying is not in progress, the open end of the pipe shall be closed to the satisfaction of the Engineer.

All pipe joint lubricants and internal coatings or sealants shall be approved by the National Sanitation Foundation (NSF61).

504.04.06 Cutting of Pipe

Pipe shall be cut at right angles and the pipe-end shall be beveled in a manner specified by the Manufacturer.

504.04.07 Jointing of Coated Ductile Iron Pipe (Urecon, Thermacor, Shaw YDI)

Bell and spigot ductile iron pipe shall be jointed in conformity to the pipe Manufacturer's Specification. Electrical continuity across the joints shall be provided as detailed on Std. Dwg. 453.1008.003, Sheet #10. Where conductivity strips have not been prefabricated to the pipe, the Contractor shall thermite weld a wire across the joint to provide electrical continuity as shown on Std. Dwg. 453.1017.004, Sheet #11. The electrical continuity across the joint shall be checked with a voltmeter, test probe or similar device approved by the Engineer. When checking electrical continuity, it is essential that the un-coated ends of the pipes are not in contact with the soil. Once continuity across the joint is confirmed, the entire joint including the conductivity strip shall be primed and wrapped with materials specified in Sec. 505.03.00.

Grooved joints shall be installed according to the manufacturer's latest published instructions. Grooved ends shall be clean and free from defects from pipe end to groove.

504.04.08 Jointing of Polyvinyl Chloride (PVC) Pipe

PVC pipe shall be jointed in conformity to the pipe Manufacturer's Specifications. Bell and spigot joints shall be made such that the factory insertion line is visible after installation. Joints without a visible insertion line shall be re-made at the Engineer's request.

Spigot to spigot joints on PVC pipe shall be made with an approved PVC line coupling unless otherwise directed by the Engineer. Metallic spigots shall not be inserted into PVC fittings nor joined by use of a PVC fitting.

Bell and spigot end-seals shall not be removed until the pipe is to be jointed in the trench. Care should be taken to ensure end seals, bags and fastenings do not to interfere or obstruct the jointing of the bell and spigot ends. The Contractor shall ensure that the pipe is not cut or otherwise damaged when removing the end seal or bag.

504.04.09 Jointing of Steel Pipe

End preparation for steel pressure pipe shall be as follows:

- Steel pipe 600mm and smaller shall have beveled ends suitable for butt joint welding.
- Steel pipe 750mm and larger shall have bell and spigot ends suitable for lap joint welding or beveled ends suitable for butt joint welding.

All in-field welding shall be in accordance with CSA/CAN-Z662 ***(latest edition)***, and Sec. 504.12.00 of these Specifications.

Welded lap joints, butt strap joints and butt joints will be permitted when installing steel pressure pipe. Butt strap joints shall be used for field trim sections and closures only. Joint detail and applicable reference standards are shown on Std. Dwg. 453.1020.005, Sheet #47.

The bell end of a lap joint and each end of a butt strap shall be provided with a 10mm threaded test hole and plug for pressure testing. Immediately after welding, the lap joints and butt strap joints shall be pressure tested using soapsuds and compressed air at 275 kPa (40 psi). Any leaks found in testing shall be repaired to the satisfaction of the Engineer and re-tested. Surface peening to stop pinhole leaks will not be permitted. Where the pipe Manufacturer of large diameter steel pipe has supplied 40mm pass plugs, the Contractor shall securely tighten the threaded plug in the pass hole upon completion of the welded joint. A single seal weld shall then be placed between the plug and the tank flange or half coupling.

The bare exterior joint area shall be thoroughly cleaned of all foreign materials, primed and tape wrapped with materials listed in Sec. 505.03.00. Field applied tape wrapping shall be performed in accordance with the Manufacturer's recommendations and the AWWA C209-00 Standard. Mil-thickness of the applied joint coating shall match or exceed the thickness of the pipe coating. As an alternate to tape wrapping the joints, heat shrink pipe sleeves will be permitted.

The bare interior joint area shall be coated with a compatible product when epoxy lined pipe has been supplied. The interior joint shall be sandblasted to "near white metal" condition to remove all rust from the areas where the lining has been held back.

A brush application of an NSF61 listed High Build Epoxy approved by the Engineer shall then be applied in strict compliance with the Manufacturer's Specifications.

504.04.10 Jointing of Concrete Pipe

This clause applies to pre-stressed concrete cylinder pipe manufactured in accordance with AWWA C301 and AWWA C303 ***(latest editions)*** as supplied by Forterra, Decast, Ameron, or approved others.

Rubber gaskets, lubricant (NSF61 approved) pipe soap and cloth diapers are normally supplied by the Manufacturer with the pipe.

Prior to joining two lengths of concrete pressure pipe, the spigot groove, the rubber gasket and the first 50mm of the bell shall be thoroughly cleaned and lubricated with an approved vegetable-based soap. The gasket shall be positioned in the spigot groove so that the rubber is distributed with an even tension uniformly around the circumference. When the pipe is lowered into position, the spigot is partially inserted in the bell of the previously laid pipe. Force shall then be applied to engage the joint using a come-along or similar suitable pulley system.

The spigot shall be advanced into the bell against a steel insert placed between the tip of the spigot and the shoulder of the bell. The insert will allow the laying length shown on the contract drawings to be maintained and will also provide a space for inserting a feeler gauge. The entire circumference of the joint shall be checked with a feeler gauge to determine if the rubber gasket is in the proper position.

If the gasket cannot be "felt" all around, the joint shall be disassembled. If the gasket is not damaged, as determined by the Engineer, it may be re-used but only after the bell and gasket have been re-soaped before the joint is re- assembled. When it has been determined that the gasket is in its proper position, the steel inserts shall be removed and the pipe shall be placed in its final position.

The inside joint recess of concrete pipe 600mm and larger shall be wiped clean, moistened, then filled and pointed with a stiff cement mortar. Pipe zone bedding and back-fill shall be completed at the joint prior to performing this activity. The mortar shall be one (1) part cement and two (2) parts sand with a consistency dry enough so that it will not fall when placed in the top of the joint. The finished joint shall be smooth and flush with the adjacent pipe surfaces.

For pipe smaller than 600mm, the inside shoulder of the bell shall be "buttered" with a stiff cement mortar. An accessory such as a specially designed rubber ball wrapped with burlap shall be used to provide back-up against which mortar is squeezed while the centered spigot is pushed "home" and to hold mortar in place in the assembled joint while alignment and grade are adjusted. The excess mortar shall be screed with the ball as it is drawn through the pipe.

The outside joint recess shall be filled with a cement mortar contained by a cloth diaper with a minimum width of 200mm. The mortar shall be one (1) part cement and two (2) parts sand with a consistency of thick cream. Prior to placing the mortar, the diaper shall be fastened securely with metal strapping leaving an access opening at the top. With the diaper in place, moisten the pipe joint space with water and pour the grout so it will flow down one side and rise on the other. A length of stiff wire wrapped around the joint recess and worked back and forth to keep the grout flowing may be used. After the recess has been filled, the opening shall be closed and the mortar allowed to set-up before the pipe zone bedding and back-fill commences at this joint. All mortar cement used shall be sulfate resistant.

504.04.11 Jointing of Polyethylene (HDPE) Pipe

HDPE fusion joints shall be made by factory trained or industry certified personnel using the appropriate manufacturers specified butt, sidewall or electro- fusion equipment, procedures, and fittings. Operator certification must be available for inspection and issued no more than one calendar year previous to be considered valid.

Fusion equipment must be serviced and maintained to the manufacturer's specifications. Butt and sidewall fusion machines shall be AH McElroy or approved equal. Electro-fusion fittings and equipment shall be by Friatec Plasson, Central Plastics or approved equal.

504.04.12 Permissible Joint Deflection

All joint deflection and bending of the pipe body on bell and spigot pipe shall be carried out in strict conformity to the pipe Manufacturer's Specifications. Bending of PVC pipe is permitted on sizes up to and including 200mm only, and shall not exceed the following limits:

Pipe Size mm	Min. Radius of curvature (m)	Max. Offset Per Full Pipe Length (6.1 m) (mm)
100	48	380
150	73	254
200	91	203

Where the curvature exceeds these limits in the horizontal or vertical plane, one or more approved 5-degree long body elbows shall be used. A maximum of two may be directly joined in opposing directions without additional joint restraint.

504.04.13 Cover Over Distribution Mains and Service Pipe

The minimum cover required over mains and services is as follows:

Type of Installation	Soil Type	
	Clay	Gravel*
Looped Mains & Services	2.7m (9')	3.3m(11')
Dead end Mains & Services & Hydrant Leads	3.0m (10')	3.3m(11')

Where the strata are a mixture of clay & gravel the cover may be adjusted to 3.0m (10') with the prior approval of the Engineer. ***Any reduced cover designs shall follow insulation requirements on Sheet 62/63 or shall be designed by the consulting engineer as per 504.04.15.***

504.04.14 Connections to Feedermains

The responsibility for feeder main connections shall be as follows:

If the Developer installs the water distribution mains prior to the City installing the feeder main, then the City will complete the tie-in to the feeder main at no expense to the Contractor under the following conditions:

- The length of the tie-in does not exceed 10 meters.
- There are no unusual obstacles, which, in the opinion of the Engineer, require an excessive amount of work or additional expense to complete the tie-in.

Where a City installed feeder main exists prior to the installation of distribution mains by the Developer, the Developer will be responsible for all costs associated with the tie-in to the feeder main, which shall be constructed in a manner satisfactory to the Engineer.

504.04.15 Frost Protection

Where cold air intrusion from a proposed large diameter storm system could result in a risk of freezing to water services or mains, or where standard horizontal or vertical separations cannot be achieved, the Consultant shall identify all locations of potential concern and determine in conjunction with the Engineer the extent of required remedial action. Any insulation design that does not follow the requirements listed for its applicable design, nonstandard designs, or in the case of reduced insulation requests, all designs must be submitted in writing to the Engineer for approval. Submissions shall be supported by thermal modelling performed by TempW or similar software confirming a minimum of 72 hours of freeze protection under maximum Calgary frost conditions and in accurate soil conditions.

When distribution mains or water services cannot be placed at the minimum cover or with horizontal separation as specified in Sec.504.04.13 or 504.16.00, the Contractor may, subject to the Engineer's approval, install the main or water service at a reduced depth or separation using Granulite™, Aggrelite™, Liteweight 730™, Cematrix™ Styrofoam HL40®, Owens Corning Foamular 400™, Terrafoam 40, EPS40 by EPS Molders, Plastispan 40 EPS insulation bedding material, Rehau PI or Urecon pre-insulated pipe or an approved equal.

Granular insulation shall be installed as detailed on Std. Dwg. 453.5003.011, Sheet #52.

Cematrix shall be installed as detailed on Std. Dwg. 453.1041.001 and Std. Dwg. 453.1042.001 Sheets # 53 and 54. Styrofoam HL40® or Owens Corning Foamular 400® and Plastispan 40 EPS shall be installed as detailed on Std. Dwg. Sheets# 62 and 63.

Designs proposing alternate insulation materials such as Urecon pre-insulated PVC pipe or Rehau PI pre-insulated PEX pipe must be submitted for prior review and approval by the Engineer.

504.04.16 Main Replacement and Alteration Projects

All piping, fittings, hydrants, valves, and other appurtenances for installation on main replacement or main alteration projects shall be new materials unless re-use of existing materials is directed and specifically approved by the Engineer.

On water main replacement or alteration projects, an approved insulating material such as Aggrelite™, Liteweight 730™, Cematrix®, Styrofoam® HL40, or an approved equal may be required under the following:

i) Main replacement at the same depth as the existing main
When a water main is to be replaced at the same depth as the existing main and the cover is not sufficient to provide adequate frost protection as determined by the Engineer, the Engineer may specify that the main be installed with a design using an insulating material.

ii) Main alteration at a reduced depth (above the existing main)
Subject to written approval by the Engineer watermains may be installed at a reduced depth as specified in Section 504.04.15

504.05.00 Installation of Valves, Fittings, Flanges and Hydrants

504.05.01 General

Damaged coating on valves, fittings and hydrants shall be repaired with materials specified in Sec. 505.03.00 to the satisfaction of the Engineer. In a non-metallic distribution system each valve, fitting and hydrant shall be cathodically protected as specified in Sec. 504.07.02. All bare fastener threads, nuts and bolting surfaces on flanges and fittings shall be protected with an approved petrolatum paste and tape as listed in section 505.03.00 of the Specifications. 304 Stainless steel nuts and bolts are exempt from paste and tape requirements.

All joint lubricants and sealants used in the installation of valves, fittings and hydrants shall be approved and listed by the National Sanitation Foundation (NSF).

PVC fittings shall not be installed in areas contaminated or potentially contaminated with volatile organic compounds (organic solvents or petroleum products), i.e. near buried petroleum fuel tanks, abandoned gas stations, petro storage areas or petro refinery sites. In these areas metallic fittings and all valves, tapping sleeves, couplings and hydrants shall also be installed with NBR (Nitrile) gaskets.

Bell-End Valves, Fittings, and Hydrants

In a metallic distribution system electrical continuity shall be provided across fittings, valves and hydrants as detailed on Std. Dwg. 453.1017.004, Sheet #11. Electrical continuity across each joint shall be checked with a voltmeter, test probe or similar device approved by the Engineer. When checking electrical continuity, it is essential that the uncoated ends of the joint are not in contact with the soil. Once continuity across the joint is confirmed, the entire joint including the conductivity strip shall be primed and wrapped with materials specified in Sec. 505.03.00.

Flange Installation

Prior to assembly, the flange faces shall be thoroughly cleaned of all foreign material. The joint shall then be assembled with the gasket centered and the bolts tightened in a manner which will not subject the pipe to excessive and undue stresses. Each bolt shall be installed with a hardened steel washer on both ends of the flange bolt to facilitate even tightening and to prevent coating damage. Diametrically opposite bolts shall be tightened progressively and evenly.

Bolts for use with gray cast iron, ductile iron and steel flanges shall be a minimum of ASTM A307B with a min. yield strength of 60 KSI, or ASTM A320 304 stainless steel Grade B8 Class 2 with a min. yield strength of 80 KSI. All bolts and nuts to be heavy hex type.

Flange gaskets shall be full faced SBR or NBR for contaminated or potentially contaminated locations with one or more annular rings molded into the gasket to improve gasket sealing performance. For approved flange gaskets, see Section ***503.01.00 (10)***.

Where electrical isolation is required across a flanged connection, the Contractor shall supply and install an approved isolating flange kit and a test point as required. The electrical isolation across the joint shall be checked with a voltmeter, test probe or similar device approved by the Engineer. Failed flange isolations shall be corrected or replaced at the Contractors' expense.

504.05.02 Distribution Valves

Valves shall be installed with the bottom box guide plate located under the operating nut. The operating assembly shall then be set vertically over the valve. Care shall be taken to ensure that the bonnet supports the bottom box, and the guide plate does not bind inside the bottom box.

In paved streets the lid of the top box shall be set flush with the finished surface. In graveled streets and lanes the lid of the top box shall be set 150mm below the finished graveled surface. The top of the operating rod shall not be lower than 450mm below the finished surface grade.

A single valve box adapter and/or one main valve casing extension will be permitted on valves as required for street crown surfacing in paved streets. Valve box adapters are not permitted in gravel lanes.

Main valve casing extensions shall be as shown on Std. Dwg. 453.1006.006, Sheet #4. The Contractor shall provide and install a plastic disc in the top box and valve box adapters as shown on Std. Dwg. 453.1006.007, Sheet #6.

Valves 250mm and larger in a metallic distribution system and valves 150mm and larger installed in a non -metallic distribution system shall be anchored as shown on Std. Dwg. 453.1006.008, Sheet #8. All valve locations shall be marked on the surface by means of a suitable marker stake. The Engineer shall specify the location of marker stakes.

504.05.03 Fittings

Thrust blocks for fittings shall be placed as detailed on Std. Dwg. 453.1003.007, Sheet #42. Dead weight reaction block requirements for vertical bends (based on 1380 kPa Pressure) shall be as follows:

Dead weight in cubic meters of concrete (m^3)

Degree of Bend	Size of Bend (mm)					
	100	150	200	250	300	400
90°	0.8	1.5	2.7	4.2	6.1	10.7
45°	0.4	1.1	1.5	2.3	3.4	5.7
22 1/2°	0.4	0.8	0.9	1.1	1.9	3.1
11 1/4°	0.4	0.4	0.5	0.8	1.1	1.5

A minimum of two ply of 0.15mm shall be placed between fittings and concrete thrust blocks. The faces of coated metallic fittings not against concrete shall be left bare of poly within the bedding material to ensure cathodic protection.

All thrust block sizing not specified is to be designed by the consultant and submitted for approval.

504.05.04 Hydrants

Hydrants shall be installed as detailed on Std. Dwg. 453.1002.001, Sheet #1. Where, after the installation of the hydrant, it has been established by the Engineer that a high water table exists, the Contractor shall plug the drain hole, paint the hydrant red (Sherwin Williams Kem 400 Enamel, Hydrant Red, F75RH1, Cloverdale Industrial Marine and Shop Enamel, Bright Red, 1118) or approved equal and attach a sign reading "Fire Use Only". The sign shall be as per Std. Dwg. 453.1002.003, Sheet #3.

504.06.00 Installation of Couplings

504.06.01 General

Couplings shall be installed in strict conformity to the Manufacturer's Specifications. The Contractor shall ensure that the connecting pipe-ends and all parts of the coupling are thoroughly cleaned prior to installation. Wrenches used to tighten nuts and bolts shall be the type and size recommended by the coupling Manufacturer. To avoid undesirable stress concentrations, all bolts shall be tightened uniformly and in a manner which will keep all coupling parts symmetrically around the pipe.

Final tightening shall be done with torque wrenches set for the torque recommended by the coupling Manufacturer. All couplings shall be wrapped with an approved petrolatum paste and tape as listed in Section 505.03.00 of the Specifications, with the exception of the following:

Approved couplings and other fittings constructed entirely from passivated 304 Stainless steel components other than rubber sealing surfaces are exempt from this requirement.

504.06.02 Bolted Sleeve & Flange Coupling Adapters

All couplings, (i.e. non-isolating or isolating coupling and electrical continuity wires and/or isolating boots as required) shall be installed as detailed on the approved construction drawings. The set screw(s) in the end-plates (on bolted sleeve couplings only) or other continuity device shall be tightened to provide electrical continuity

between the end-plates and the sleeve. Unless couplings are cathodically protected from an existing energy source, a separate anode shall be installed as detailed in Sec. 504.07.02.

Electrical continuity or discontinuity as required across the coupling shall be checked with a voltmeter, test probe or a similar device approved by the Engineer. Once, the electrical continuity/discontinuity has been confirmed, the entire coupling including any continuity wires shall be primed and wrapped with material specified in Sec. 505.03.00.

504.06.03 Victaulic Couplings

Victaulic couplings or equivalent ShurJoint couplings shall be installed where indicated on the Drawings. The use of Victaulic/Shurjoint Style 44 couplings or Victaulic AGS couplings is limited to underground valve chambers where 500mm and larger butterfly valves are required unless otherwise approved. Shouldered or Victaulic ring-ends shall be supplied by the pipe and valve Manufacturers unless otherwise specified on the Drawings. Style 44 Victaulic couplings shall be assembled with a minimum clear gap of 6mm between the pipe ends.

504.07.00 Installation of Cathodic Protection

504.07.01 General

Cathodic protection is required for all new metallic elements installed on new or existing water distribution systems, with the sole exception of metallic elements constructed entirely of grade 304 or higher fully passivated stainless steel.

Metallic appurtenances and piping shall be equipped with approved dielectric coatings and cathodic protection as required within these Specifications. Where connections are made to existing bare or unprotected system components, approved electrical isolation(s) shall be provided as required unless specifically approved otherwise.

Where required and approved by Water Resources, all test stations, structure and anode leads, electrical bonding, isolating elements and cathodic protection provided by galvanic or impressed current systems shall be installed and inspected for compliance in accordance with these Specifications.

The Contractor shall repair any cathodic protection defects noted during CCC and FAC certificate inspection at no additional cost to the City to the satisfaction of the Engineer and the Supervisor of Corrosion.

504.07.02 Installation of Sacrificial Anodes

Sacrificial anodes which are contained in a plastic bag shall be removed from the plastic bag and placed at the same depth and one meter away from the structure being protected unless otherwise approved. The anode shall not be placed in granular bedding material.

Where necessary, or at the request of the Engineer, the anode(s) shall be excavated and buried below the invert of the pipe or placed adjacent to a bank of the excavation and buried under native fill to ensure proper function.

The cardboard anode packaging shall be punctured and back-fill around the anode shall be uniformly compacted and thoroughly soaked with water in order to ensure activation of the anode. Where space available for anode placement is restricted, the Engineer may consider permitting reduction or re-configuration of the approved anode bed.

Unless otherwise approved, all wire connections to a structure shall be made by means of the "thermite weld" method or approved equal. All structure wires shall be redundant

(duplicate leads welded 150mm apart on the structure). The thermite weld procedure shall be carried out as follows:

- Remove all coating and thoroughly clean a 75mm square area. This area shall be filed to white metal.
- Crimp a properly sized copper sleeve onto the bare end of the wire. Weld the crimped wire to the structure by means of a crucible filled with the manufacturer's recommended thermite weld shot, see Std. Dwg. 453.1017.002, Sheet #9.

To safely produce an acceptable high-quality weld. The appropriate pipe size/curvature matching crucible made by Erica, Thermoweld, or approved equal shall be used in accordance with the Manufacturer's Specifications. To avoid coating damage to the inner wall of coated steel pipe and fittings, thermite welds on this material require the smaller 15 gram shot.

- Remove all slag from the weld-on wire connection and file smooth any sharp edges. Apply Roybond 747 primer and a molded plastic patch "Handicap" over the wire connection. The "Handicap" shall be as supplied by Royston, Calpico, or approved equal.
- Tape the wire(s) to the pipe and ensure that the connection(s) and wire(s) are not damaged during back-fill.

504.07.03 Cathodic Protection for a Non-metallic Pipe System

All metallic elements in a PVC pipe distribution system shall be cathodically protected. A 2.3kg zinc sacrificial anode shall be connected (without a test point) to each valve, fitting and coupling and a 5.4kg zinc sacrificial anode shall be connected (without a test point) to each hydrant. Approved couplings and other fittings constructed entirely from passivated 304 Stainless steel components other than rubber sealing surfaces are exempt from this requirement. The Contractor may at his option install and connect a single 5.4kg zinc anode to one valve and one adjacent metallic fitting. Where required, pipe and fittings shall be connected by thermite welding #10, RWU90, 7 strand bonding wire with copper sleeves between non-electrically continuous piping components.

Alternatively, the Engineer may direct that continuity be established by mechanical means such as installation of bolts, wire harnesses, or the grinding of coatings as approved. Sacrificial anode installations shall be inspected by the Engineer prior to back-filling as specified in Sec. 502.00.00.

Copper service pipe shall be cathodically protected with a 5.4kg zinc anode. The lead wire of the anode shall be fastened to an approved wire connector located on the compression nut of each main stop.

504.07.04 Cathodic Protection for an Existing Metallic Pipe System

Whenever an existing metallic water or sewer main is exposed for any purpose, the Contractor shall supply and install a 14.5kg magnesium anode to protect the existing system unless otherwise directed by the Engineer. If the tie-in requires the replacement of more than 5m of existing non-coated metallic pipe, then two (2) 14.5kg magnesium anodes shall be installed to protect the existing system. If the tie-in is made to an existing coated pipe, then depending on pipe potential readings the number of anodes may be increased or reduced to one 14.4kg magnesium anode at the Engineers discretion. Electrical continuity shall be maintained in an existing system. Test points are not required for these anode installations. Copper service pipe shall be cathodically protected with a 5.4kg zinc anode.

The lead wire of the anode shall be fastened to a wire connector located on the compression nut of a brass service fitting. When no service fitting is exposed, the anode may be connected with an Erico ground clamp, CWP1JU (to 25mm) or CWP2JU (to 50mm) or approved equal.

504.07.05 Cathodic Protection for a New Metallic Pipe System

A distribution main system constructed of metallic pipe shall be cathodically protected with magnesium anodes. The type and number of sacrificial anodes shall be established as recommended in the "Design Guidelines for Subdivisions". Additional magnesium anodes shall be installed along the main at 30 meter intervals. The anode lead wires shall connect to the structure via a test point as shown in Standard Drawings: Sheets #12, #13, #15, #15A, #16, #16A, #17, #18, #20

Copper service pipe shall be cathodically protected with a 5.4kg zinc anode. The lead wire of the anode shall be fastened to the wire connector located on the compression nut of each main cock.

Electrical continuity shall be provided throughout a metallic pipe system as specified in Sec.504.04.07, 504.05.01and 504.07.02, except as below:

- All copper service connections shall be electrically isolated at the main as specified in Sec.504.11.02
- Distribution mains shall be electrically isolated at tie-ins to existing metallic pipe and where shown on the approved plans.
- All non- stainless steel bolts on flanges in buried chambers shall be protected by an approved zinc anode nut. Flanges and flange bolts shall be petrolatum taped after installation with the exception of the anode nut body, which shall be left exposed.

Electrical isolation shall be provided with the use of an approved isolating flange gasket kit, isolating straight line coupling, monolithic iso-stop where approved or a short length (600mm) of approved PVC pipe as specified in Sec. 503.02.15 and shown on Std. Drawings: 453.1017.001, Sheet #13 and 453.1017.008, Sheet #17.

Test points in a metallic distribution system may be required as specified and approved at the following locations:

- At anode bed installations, carrier and encasement pipe installations, specific isolating elements, and at ties to existing metallic systems. See the following Sheets: 12, 13, 14, 15, 15A, 16, 16A, 17, 18, 20.
- All structure test leads (identified as black, red, green wires in the above drawings) shall be made by providing two leads of the same color from each structure into the test station from redundant thermite connections made 150mm apart.
- At locations where the water main crosses or parallels an existing metallic pipeline. A wire shall be thermite welded to each pipe system and brought to a test point. The purpose of this test point is to control cathodic interference. These test points may require the installation of an interference monitoring cell at the discretion of the Engineer. The Contractor shall obtain the approval of the owner of the existing pipeline prior to thermite welding.

<u>Re-location of previously installed Test Points</u>

- Test lead extensions shall be made at the existing test point location at a depth of 1.3m below surface grade.
- Wires shall be size and color as per the SSWWC permanently crimp connected

and field coated to the satisfaction of the Engineer.

- Bundle extended test leads and tape together at intervals of 1m and trench at a minimum depth of 1.3m to the new test station location.
- Install marking tape, i.e. "caution electric wires below" 300mm above test lead wire-run to base of new test station.
- Bring leads into to test station head/box ensuring 1m of folded slack wire inside test station tube at base and 200mm of slack at head/box.
- Continuity of test leads to be confirmed prior to extension and after re- location to the satisfaction of the Engineer (Corrosion Tech).
- Provide as-built drawing showing coordinates of extension point (old test station location) and new test station location as well as depth of wire.

Sacrificial and impressed current anode systems, electrical isolations and all test station installations shall be inspected by the Engineer prior to back-filling as specified in Sec. 502.00.00.

Prior to the issuance of the Construction Completion Certificate and the Final Acceptance Certificate the Contractor shall demonstrate to the Engineer that the following exist in a newly installed metallic distribution system:

- That the water distribution system is electrically continuous between isolating elements.
- That complete electrical discontinuity exists across all isolating elements in the distribution system.
- That test points are not damaged and in good working order (i.e. that the electrical path from the anodes to the test point and from the test point to the pipe and other elements as required is complete).

504.08.00 Compaction and Back-filling

504.08.01 Compaction and Density Requirements

Compaction and density shall conform to the Standard Specifications Roads Construction and these Specifications. Where a conflict exists, these Specifications shall govern. Heavy compaction equipment as determined by the Engineer shall not be used within 600mm above the top of the pipe. The density in the pipe zone as shown on Std. Dwg. 453.1003.003, Sheet #39 shall be as specified in Sec. 504.03.08.

504.08.02 Back-fill Material

Bedding and pipe zone back-fill shall conform to Sec. 504.03.00. The back-fill material above the pipe zone (i.e. 300mm above the top of the pipe to the pavement sub-grade) shall conform to the Standard Specifications Roads Construction. No frozen back-fill material will be permitted.

504.09.00 Water System Commissioning

504.09.01 General

All newly installed piping shall be subjected to the following hydrostatic pressure and leakage test in the presence of the Engineer.

Hydrostatic testing is to be conducted by competent and experienced personnel with equipment and procedures appropriate for the piping being tested and test pressure applied. The pressure shall be monitored with a suitable pressure gauge. Pressure

testing shall not commence until at least five (5) days have elapsed after the last concrete thrust block has been cast with 20 MPa concrete. The elapsed time may be reduced to 48 hours if 25 MPa concrete is used. All concrete shall be sulfate resistant. Fire hydrants shall be operated in a full-open or full-closed position only. Flow control shall be achieved by throttling a secondary valve which must be installed on the hydrant outlet(s) on a temporary basis.

During flushing the Contractor shall provide and install a pitot gauge or other product suitable for reporting the total volume released from the flushing device. The totalized volume of flush shall be reported on the Potable Water Flushing Permit to waterservadmin@calgary.ca. Approved methods of measurement include:

- ***a) Pitot gauge with stopwatch or other timing device.***
  - ***a. P659 Series Pitot with Gauge***
  - ***b. P905 Flow Test Kit***
  - ***c. NNI Hydrant Flow Pitot Kit***
  - ***d. Or approved equal***
- ***b) Pitot-less nozzle with stopwatch or other timing device.***
  - ***a. Hose Monster***
  - ***b. Hydro Flow***
  - ***c. Or approved equal***
- ***c) Flow meter***
  - ***a. McCrometer M1104***
  - ***b. Badger Model 450***
  - ***c. Or approved equal***

The Engineer may specify that an approved back-flow prevention device be provided at any temporary connection, including connections to hydrants. The device is required to prevent contamination of the water supply due to potential back-siphonage or back-pressure. An approved air gap at the discharge point of the hose is a suitable alternate to this requirement if approved by the Engineer.

All potable and hyper chlorinated water flushing activities undertaken by the Contractor for the purposes of cleaning, pressure testing, disinfecting, commissioning, and return to service of water mains must occur under the Conditions outlined in the approved Potable Water Flushing Permit. Application for this Permit shall be made directly to the Water Resources site Inspector, or to Water Resources Inspection Services via 311.

Operation of any water main valve connecting private subdivision development and/or private development sites to the public water system is subject to the guidance, requirements and permission of the Director, Water Services. Check for most recent information on these directives at:

https://www.calgary.ca/uep/water/specifications/water-development-resources/water-development-approval-updates-bulletins.html

504.09.02 Preliminary Flushing of Mains and Services

Prior to pressure testing all distribution mains and service connections (larger than 50mm) shall be thoroughly flushed to remove all entrapped air and foreign matter. The Contractor is to notify Water Services 24 hours in advance of any flushing activity via email to LIMSResults@calgary.ca.

Sufficient water shall be discharged during the flushing operation to create a minimum velocity of 0.75 m/s in the main and service connections. This may be achieved by the following methods:

Flushing through a Hydrant

The number of connections to a hydrant based on 30m of 65mm fire hoses shall be as listed below:

Pipe size (mm)	100	150	200	250	300	400
Temp. Connections	1	1	1	1	2	3

Flushing through a Permanent Dead End Flushing Device

Device type is determined by the size of main as listed below:

Pipe Size (mm)	100	150	200	250	300	400
Type of Device	A or B	A or B	A or B	C	C	C

Main Replacement or Alteration Temporary Flushing Connection

The number of connections based a 50mm main stop and 30m of 65mm fire hose to achieve adequate flushing shall not be less than the following:

Pipe size (mm)	100	150	200	250	300	400
Temp. Connections	1	1	1	2	2	4

Main Replacements and Alterations shall be flushed of by one of the following methods:

1) A 50mm main stop shall be tapped through a saddle near the end of the main. The main stop and saddle shall be removed upon completion of the flushing and chlorinating procedure and a PVC repair coupling shall be pushed over the tapping hole. The repair coupling shall be pushed onto the last pipe section prior to thrust blocking the end-plug.
2) The 50mm main stop(s) shall be tapped into an end-cap or into a short pipe section placed at the end of the main. These temporary facilities shall be removed upon completion of the flushing and chlorinating procedure.

Care shall be taken to ensure that no contaminants enter the pipe during the removal of the temporary pipe section. A sufficient sump hole shall be provided to receive water spillage and ground water. Unless otherwise approved by the Engineer all water from preliminary flushing operations shall be discharged into the storm sewer system. All flushing water directed to the storm system shall be de-chlorinated to the satisfaction of the Director, Water Services.

504.09.03 Pressure Testing Procedure

After completion of the preliminary flushing and after cement mortar lined pipe has been left to soak for 48 hours under low pressure, the Contractor shall subject the pipe to the noted water pressure by pumping water from a clean reservoir into the main. The Engineer may limit the length of pipe to be tested from one location.

The test section shall be subjected to 150% of the normal working pressure or 1 MPa (150 psi) whichever is the greater at the lowest elevation and not less than 125 % of the normal working pressure or 860 kPa (125 psi) whichever is the greater at the highest elevation. The test pressure shall not exceed the Manufacturer's recommended maximum test pressure.

The test pressure shall be maintained (by additional pumping if necessary) for two (2) hours. While the line is under pressure, all exposed fittings valves and hydrants shall be examined for leakage.

Defective elements shall be repaired or replaced, and the test repeated until all visible leakage has been stopped and the allowable leakage requirements have been met.

The Engineer may, at his discretion may stop the test after one hour if the leakage is well below that allowable. All repairs to the pipe shall be carried out to the Engineer's satisfaction, and the excavation shall not be back-filled until inspected by the Engineer.

Defective pipe shall be replaced with new pipe; repair clamps shall not be used for this purpose. Failed material shall be made available to the Engineer for investigation. After completion of all repairs and prior to re-testing, the preliminary flushing of mains and services shall be repeated to the satisfaction of the Engineer.

504.09.04 Allowable Leakage

Leakage is defined as the quantity of water that must be supplied into the newly laid pipe to maintain pressure within 5 psi (34.75 kPa) of the specified test pressure. No installation will be accepted if the leakage is greater than that determined by the following formula:

For DI Pipe: $$L = \frac{ND\sqrt{P}}{32{,}046}$$

For PVC Pipe: $$L = \frac{ND\sqrt{P}}{128{,}225}$$

Where:
L= the allowable leakage (liters per hour)
N= Number of joints in the pipeline tested
D= the nominal diameter of the pipe (mm)
P= the average test pressure in kilopascals

Allowable leakage per 100 joints in liters per hours is as follows:

Pipe Diameter (mm)							
Pressure (kPa)	100	150	200	250	300	400	500
	For Ductile Iron Pipe						
900		14.0	18.7	23.4	28.1	37.4	46.8
950		14.4	19.2	24.0	28.9	38.5	48.1
1000		14.8	19.7	24.7	29.6	39.5	49.3
1050		15.2	20.2	25.3	30.3	40.4	50.6
1100		15.5	20.7	25.9	31.0	41.4	51.7
1150		15.9	21.2	26.5	31.7	42.3	52.9
1200		16.2	21.6	27.0	32.4	43.2	54.0
For PVC Pipe							
900	2.34	3.51	4.68	5.85	7.02	9.4	11.7
950	2.40	3.61	4.81	6.01	7.21	9.6	12.0
1000	2.47	3.70	4.93	6.17	7.40	9.8	12.3
1050	2.53	3.79	5.05	6.32	7.58	10.1	12.6
1100	2.59	3.88	5.17	6.47	7.76	10.3	12.9
1150	2.64	3.97	5.29	6.61	7.93	10.6	13.2
1200	2.70	4.05	5.40	6.75	8.10	10.8	13.5

504.10.00 Disinfecting and Final Flushing

504.10.01 General

Disinfecting and final flushing of mains and service connections (larger than 50mm) shall be carried out after successful completion of the hydrostatic testing and prior to the tapping of 50mm and smaller services. The Contractor is to notify Water Services 24 hours in advance of any flushing activity via email to LIMSResults@calgary.ca.

This procedure shall be carried out in the presence and to the satisfaction of the Engineer. Services 50mm and smaller shall not be tapped prior to satisfactory results being issued by the Water Resources laboratory. The use of hydrants and temporary service connections shall be carried out as detailed in Sec. 504.09.01

It is the Contractor's responsibility to ensure that water from the mains is not used for drinking and that the mains are not placed into service until satisfactory water quality test results have been received.

504.10.02 Disinfecting and Final Flushing of Mains and Services

After pressure testing as specified in Sec. 504.09.00, all distribution mains and services (larger than 50mm) shall be disinfected in sections as specified by the Engineer. A solution of calcium hypochlorite (HTH) shall be injected while sufficient water is being discharged through the main to bring the chlorine content to a concentration of 25 mg/L.

The following table may be used to compute the calcium hypochlorite requirements:

Pipe Size (mm)	100	150	200	250	300	400
65% HTH (grams per 100m of Pipe)	35	75	135	205	300	515

Calcium Hypo-chlorite shall conform to the AWWA B300 ***(latest edition)***. Liquid chlorine shall conform to the AWWA B301 ***(latest edition)***. The chlorine solution shall be injected near the tie to the existing system and the discharge point(s) shall be near the extremities of the system.

Once the chlorine has reached the extremities of the system, the intake and discharge valves shall be closed, and the system shall be left to stand 24 hours (unless otherwise directed by the Engineer).

At the beginning of this contact period all valves (including hydrant valves) and hydrants shall be operated to ensure that all parts have been in contact with the chlorine solution.

The system shall then be flushed to expel all water with high chlorine content into sanitary sewer mains and the following precautions shall be taken to control the flow in the sanitary sewer mains.

Flow restrictors are required on any hydrant and/or other device used for flushing of the disinfecting chlorine solution (introduced into a watermain by the Contractor) into a sanitary sewer main. The purpose of the flow restrictor is to ensure the capacity of the sanitary sewer system is not exceeded.

The flow restrictor (i.e. orifice plate or other device) shall ensure the following maximum discharge rates into the sanitary sewer mains are not exceeded:

Diameter of Sewer Main	Max Discharge Rate
200mm	900 L/min (200 lgpm)
250mm	1,100 L/min (240 lgpm)
300mm	1,600 L/min (360 lgpm)

At least one (1) manhole downstream of the point of entry into the sewer main shall be checked periodically to ensure the flow in the sewer main is not exceeding one half (1/2) of the pipe capacity.

After the high chlorine content has been flushed into sanitary sewer main the final flushing shall continue until the turbidity level of 1.0 NTU or less and ***minimum*** positive residual chlorine of ***0.4mg/L*** is achieved ***unless otherwise directed by the Engineer***. The inspector will use field instruments to confirm these levels. ***Any residual chlorine levels below 0.3mg/L after flushing are to be reported to the Engineer for DWD's involvement.***

All flushing water directed to the storm system shall be de-chlorinated to the satisfaction of the Director, Water Services.

Immediately after flushing the Contractor shall arrange for the City Inspector to obtain water samples to be tested at the Water Resources laboratory for turbidity, chlorine residual and microbiological parameters at no expense to the Contractor.

The Contractor is required to provide a sampling point at the main, hydrant, service, or device to the satisfaction of the Engineer. Samples from temporary flushing hoses are not acceptable.

After completion of the flushing and disinfecting operation the removal of the temporary flushing facility and closing of the main as specified in Section 504.09.02 shall be performed in the presence of the Engineer.

Care shall be taken to ensure no water from the excavation or other foreign matter will enter the main. The Contractor shall not put mains into service without the approval of the Engineer.

504.11.00 Installation of Water Services

504.11.01 General

When hot tapping water mains for installation of new servicing (25mm to 400mm), circumstances may require that the water main be controlled in order to mitigate the risks arising from an unexpected sudden failure. The degree of this risk increases with the relative size of proposed tap to host pipe material, with size on size taps on non-metallic mains presenting the greatest risk of unexpected failure.

It is the responsibility of the Contractor to determine whether to request control of a public water main where Control is indicated as "optional" based on their own professional risk assessment. Upon determining to exercise the "Control Optional" decision, the Contractor is accepting all liability that may arise in the event of a Contractor tapping failure resulting in property damage or loss of service to Customers. Where an unplanned loss of service occurs, Water Services may require provision of temporary servicing at the Contractors expense. Consult table for guidance.

Main Diameter	Material			
	Metallic (DI/CI/YDI/Steel)	Concrete C300, C301, C303	HDPE	PVC&AC
100-350 (mm)	Control optional at Contractor's risk	N/A	Control optional at Contractor's risk	Control optional at Contractor's risk on 50mm tap and smaller Mandatory control where the tap is size on size, or only one pipe size smaller than the host pipe.
400mm and greater	Control optional at Contractor's risk unless DWD indicates the main to be Critical	Control Mandatory, work requires DWD Review	Control optional at Contractor's risk	Control is Mandatory, work requires DWD Review

All arrangements for the control of watermains must be made by contacting DWD Field Services Operations Liaison at 403-268-4355 to request an appointment in advance (a minimum of 7 days) to any proposed work. Scheduling of work is subject to distribution system operational requirements and due to this, may not be available at the specific requested time. Hot tapping work shall be in accordance with the requirement of Interruption of Services (Section 504.01.18). When the work is complete and ready for the required flush and sample, email WaterServicesCC@calgary.ca to request this service.

Requirement for Post Hot Tapping Flush and Water Quality Sample

All Public and Subdivision Development mains shall be flushed and sampled for Water Quality to the satisfaction of the Engineer following hot tapping operations. In the case of multiple taps being performed within a section of controlled main in a Subdivision phase, the flushing shall be directed to either the originally approved temporary flushing point or a perimeter hydrant approved by the Engineer. The purpose of this procedure is to verify that:

- All hot tapping coupons have been recovered from the main
- Water Quality has been maintained during hot tapping operations

Subdivision Development Hot Tapping

Where hot tapping is performed under a Development Agreement prior to CCC/FAC being issued, controlling of the Developers water main for servicing purposes may proceed as per the Contractors Safety Plan at the discretion and under the control of the Consultant who must ensure that:

- Positive pressure is maintained in the main during all hot taps by means of a Water Services approved designated Perimeter Valve as per Water/ BILD Industry Bulletin (June-2018).
- Water Services via 311 or Water Resources Inspector is notified of any potential customer impacts prior to hot tapping commencing.
- All requirements pertaining to flushing activities and sampling/testing contained within these Specifications are adhered to.

Water services up to and including 50mm in size shall be installed in a common trench in conjunction with the sanitary and the storm sewer lines, unless otherwise approved by the Engineer as detailed on Std. Dwg. 453.1003.001, Sheet #23. Water services larger than 50mm shall be installed in a separate trench as detailed in the Design Guidelines for Subdivisions (see Appendix D).

Whenever service lines must be installed at different elevations in a common trench, the higher service shall be laid on a shelf of undisturbed ground, as detailed on Std. Dwg. 453.1003.002, Sheet #24.

If shelving the higher service line is not possible then the Contractor shall re- establish the foundation of the higher utility with compacted back-fill to the satisfaction of the Engineer.

Pre-installed residential service connections constructed under a Development Agreement shall be located at the center line of each lot (unless otherwise specified on the approved building grade plan) and shall be a minimum of 25mm in size unless otherwise approved.

Service connections shall be installed to 5.0m inside the property line where the water service connections cross a gas line and one or more shallow utilities within a front yard easement. Services installed to existing buildings shall be along a line that will best suit the interior plumbing.

504.11.02 Installation of Water Services

A. General

New water services shall be sized to meet the current minimum water service size requirements of The Canadian Plumbing Code Division B. Water services shall not be installed prior to the completion of pressure testing and chlorinating of all mains and hydrants.

Service installations under Development Agreement may proceed at the discretion of the Engineer following Disinfecting and Final Flushing as per Section 504.10.02 and sampling for a Water Quality test has been completed. The Engineer reserves the right to disallow servicing until issuance of an acceptable Water Quality Report in circumstances where contamination of the laid pipe is suspected.

In the event of the return of a failed Water Quality Report, the Contractor must immediately isolate the failed section of main and repeat the previous Disinfecting and Final Flushing procedure with inclusion of all water services installed during the interim period between the Failed Sample and the Failed Water Quality report.

This procedure shall incorporate disinfecting, final flushing, and sampling from each service tailpiece and all the originally installed main flush points as well as any hydrants within the failed sample area. No further construction of mains or services under this Development Agreement shall be permitted to proceed until a successful Water Quality Report is confirmed.

Water service piping up to and including 50mm in size for installation in high risk of hydrocarbon contamination locations as designated by the Engineer, shall be copper only.

Water services shall be installed in a continuous manner commencing with the connection to the main and terminating at the approved location inside the property. It is not acceptable to pre-install service lines with the intent to connect them to the main at a later date.

Where newly installed storm, sanitary or water mains are undermined to permit installation of servicing, the Contractor shall prove the successful re-instatement of the removed bedding materials following the service installation by verifying consistency to the previous main elevations to the satisfaction of the Engineer.

Unless otherwise specified, main stops shall be tapped into the main under normal operating pressure with an approved tapping machine. After completion of each tapping connection, the area below and 75mm above the main, the main cock and gooseneck shall be back-filled with a suitable back-fill material listed in Sec. 504.03.05 and compacted to the density specified in Sec. 504.03.08.

Where new water mains are to be tapped, the surface of the main and the tapping equipment that will be introduced into the water column of the main shall be dis-infected with a minimum 1% sodium hypochlorite solution immediately prior to the tapping operation.

Pre-installed copper service lines shall be crimped and PEX pipe shall be plugged at termination points with a brass plug and crimp-ring to the satisfaction of the Engineer immediately after flushing. The cover over service lines shall be as specified in Sec. 504.04.13.

B. Tapping method

All tapping of services 50mm and smaller on metallic mains shall be with an approved Robar 2786 NBR isolating saddle. Consult table below for tapping methods:

	Ductile Iron						Cast Iron					
Pipe (mm)	100	150	200	250	300	400	100	150	200	250	300	400
Class	350	350	350	350	350	350	22	22	22	23	24	25
Tap Size (mm)	Tapping Method											
20	2	2	2	2	2	2	2	2	2	2	2	2
25	2	2	2	2	2	2	2	2	2	2	2	2
40	2	2	2	2	2	2	2	2	2	2	2	2
50	4	2	2	2	2	2	4	2	2	2	2	2
100+	N/A	3	3	3	3	3	N/A	3	3	3	3	3

	Asbestos Concrete						PVC					
Pipe (mm)	100	150	200	250	300	400	100	150	200	250	300	400
Class	150	150	150	150	150	150/ 200	DR 14	DR18				
Tap Size (mm)	Tapping Method											
20	2	2	2	2	2	2	1	1/2	1/2	1/2	1/2	1/2
25	2	2	2	2	2	2	1	1/2	1/2	1/2	1/2	1/2
40	4	2	2	2	2	2	2	5	5	2	2	2
50	4	4	2	2	2	2	2	5	5	2	2	2
100+	N/A	3	3	3	3	3	N/A	3	3	3	3	3

Where:

1 = Direct tapping.

2 = Tap through an approved saddle.

1/2 = Option of direct tap or saddle tap in new Development distribution system construction; saddle tap is required for Infill construction.

3 = Tap through an approved tapping tee.

4 = Tap through a stainless-steel Robar Boss Clamp.

5 = In new systems connect to a pre-tapped PVC coupling.

5 = In existing systems use an approved saddle

n/a= Not allowed except where approved by the Engineer.

The Engineer may specify that the last two to six water services in residential cul-de-sacs be connected to an approved brass multi-service fitting. The multi- service fitting shall be connected to an in-line tapped PVC coupling or an approved tapping saddle c/w 50mm main cock and service pipe.

Distribution mains shall be tapped at position 5-15 degrees above the spring line. The service pipe shall form a small gooseneck as detailed on Std. Dwg. 453.1003.001, Sheet #23. The top of the gooseneck shall not rise above the top of the main.

C. Tapping metallic pipe

Taps on metallic mains shall be made 300mm away from adjacent taps, fittings, pipe joints, valves, or repair sleeves. When connecting a service pipe to a metallic water main, the service shall be electrically isolated from the main as follows:

- All services up to and including 50mm shall be isolated with an approved isolating saddle. The area of the tapping connection including the main, main cock, saddle, and copper pipe within 600mm of the main shall be thoroughly primed and wrapped with material specified in Sec. 505.03.00.
- Metallic service pipe 150mm and larger shall be isolated with an approved isolating flange gasket kit, a short length (600mm) of approved PVC pipe or a straight line isolating coupling as per Sec. 503.02.15.
- When tapping through a saddle into PE coated ductile iron pipe sufficient coating shall be removed so that the saddle seals against the pipe wall.
- Prior to back-filling the Contractor shall use a voltmeter, or approved device to ensure that electrical isolation exists between the main and service connection.

D. Tapping PVC pipe

These procedures shall be observed when tapping into PVC pipe:

- Tapping shall not be permitted on curved or bent pipe as per the Manufacturer's tapping procedures.
- Where permitted by the Engineer, tapping of PVC pipe may be carried out by closing all adjacent line valves with the exception of a designated "control" valve throttled down to prevent rapid flooding of the excavation in case of pipe failure. In situations when the Engineer deems it necessary, the main shall be shut down by closing all main valves before tapping is commenced. In this case, the Contractor may be required to provide temporary servicing to affected customers or provide positive pressure during tapping at his own cost, at the discretion of the Engineer. Prior to back-filling, the pressure shall be restored and the connection(s) inspected for leaks.
- When "hot" tapping service branches 100mm and greater in size, taps shall be made a minimum of 1.5 meters from the nearest joint, fitting, or existing tap 100mm or larger. For additional tapping sleeve usage restrictions and requirements see page 20, Section 503.02.13.

- Taps less than 100mm in size on Development Agreement PVC pipe may be made by either direct tap or saddle tap method and shall be separated by a minimum of 600mm and shall not be placed within 600mm of a bell. Direct tapping bits shall be Footage Tool T601-6, T603-6, Reed DT75, DT100, or an approved equal. Saddle tapping bits shall be Footage, Reed, Mueller or Romac shell. Saddle tapping bits for use on PVC shall be shell cutter style only.

When installing new services less than 100mm in size on existing City owned, previously buried PVC distribution pipe (Infill tapping on up to and including 400mm pipe) the Contractor must saddle tap with an approved all stainless steel saddle installed as per the Manufacturers installation instructions with an approved shell cutter bit.

Where "infill" saddle tapping is required, the minimum separation between taps performed with a shell cutter may be reduced where necessary to 400mm, provided that the taps are not made in the same longitudinal alignment.

Example: two saddle taps on the same side of the pipe may be separated by 400mm provided they are 30 degrees offset, with one at the 9:00 o'clock position and the other at the usual 10:00 position.

Prior to tapping, Teflon tape (2-3 wraps) shall be applied over the male thread of the main stop.

A heavy protective blanket shall be placed over the pipe in the tapping area and personnel shall wear suitable eye protection. Observe the Manufacturer's installation instructions and safety procedures.

E. Installation of service valves

The service valve shall be supported and centered on a 40 x 140 x 200mm plastic block, as supplied by Earth First Solutions, Westview or approved equal. When services are pre-installed in subdivision constructed under a Development Agreement, it is recommended that the top box is set below the final grade at sufficient depth to avoid damage during the maintenance period.

The Contractor shall raise the top box to final grade prior to the issuance of the final acceptance certificate for surface improvements or at such time as requested by the City Engineer. Service top boxes in gravel lanes shall be set at final grade where within 0.5m of the PL. Where the SV location exceeds 0.5m from PL, the top box shall be set a minimum of 75mm and a maximum of 150mm below final grade of the gravel lane.

The raising of the top box may be performed either by sliding the top box over the casing or by extending the top box with a short, galvanized pipe section and a coupling of the same diameter as the top box.

When sliding the top box over the casing, the set screw at the bottom of the top box shall be loosened to avoid raising the casing pipe. Where required, the installation of a single casing repair coupling as shown on Std. Dwg. 453.1033.001, Sheet #26, shall be permitted. The service valve operating assembly shall be placed vertically over the center of the service valve.

The location of the service valve shall be marked with a 4x4 wooden marker a minimum of one (1) m in length. The wooden marker shall be set firmly into the ground to a depth of 300mm adjacent to the top box and clearly marked with the letters "W.V." The depth of the service valve shall be as specified in Sec. 504.04.13.

F. Installation of copper service pipe

A zinc sacrificial anode shall be installed with each copper service as detailed on Sec. 504.07.04.

G. Installation of PEX service pipe

When connecting PEX pipe to main stops and service valves, stainless steel inserts shall be used. Inserts shall be Cambridge, Ford, Mueller or an approved equal.

Tracing wire shall be installed on all services in cul-de-sacs and whenever a service cannot be laid at 90 degrees out from the main to the service valve, or as required by the Engineer. Tracing wire installations shall be as detailed in Std. Dwg. 453.1031.003, Sheet #57.504.12.00

504.12.00 Welding Specifications

Welders Qualifications

Welders of new pressure pipe shall be qualified under Sec. CSA/CAN- Z662 ***(latest edition)*** and shall possess a current Alberta Class "B" Pressure Welding Certificate.

For other and repair work, an Alberta First Class Welding Certificate and relevant experience may be submitted for consideration prior to any work being undertaken. Acceptance of such shall be at the sole discretion of the Engineer.

Welding Procedures

All welding shall be carried out in accordance with Sec. 6 of the CSA /CAN Z662 (latest edition). Bell holes for field welds shall have a minimum clearance of 600mm around the pipe. This clearance shall extend at least one (1) meter along the pipe.

Prior to welding, all joints shall be thoroughly cleaned. Rust, paint, oil, grease, coal tar enamel or any other deleterious material which will adversely affect weld quality shall be removed to the satisfaction of the Engineer.

When the ambient temperature is below 0°C, joints shall be preheated immediately prior to welding to ensure good penetration. When the ambient temperature rises above 10° C, the Contractor shall weld every third or fourth pipe section early in the morning (7:00 AM to 7:30 AM).

The purpose of this procedure is to eliminate undesirable residual longitudinal stresses. The Contractor shall use adequate weather shields to protect the welding operation from rain, snow, and wind. The Engineer has the right to stop all welding if in his opinion adverse weather conditions will affect the quality of the weld.

Where more than one pass is required, each pass, except the first and the final, shall be peened to relieve shrinkage stresses. All dirt, slag and flux shall be removed before the succeeding bead is applied. Each weld shall be to the satisfaction of the Engineer.

Standard of Acceptability

The Engineer shall have the right to inspect all welds by visual, radiological, or other non-destructive test method. Inspection may be made during welding or after the weld has been completed.

Under visual examination welds shall be free of cracks, inadequate penetration, unprepared burn-through and other defects, and shall present a neat workmanlike appearance.

Radiological examination may be used at the discretion of the Engineer to determine the penetration, slag inclusion, cracks, and other defects. The Engineer shall be the sole judge as to the acceptability of each weld. If a dispute should result as to the acceptability of a weld, a specimen may be taken of the weld at the location determined by the Engineer and subjected to tests in accordance with Sec. 6 of CSA/CAN ***Z662 (latest edition)***.

An acceptable weld shall show that:

- There are not more than six gas pockets per 25mm^2 of surface area of the specimen with the greatest dimension not exceeding 1.6mm
  and
- No slag inclusion is more than 0.8mm in depth or 3.2mm or one half the nominal wall thickness in length, whichever is shorter, and there shall be at least 12mm of sound metal between adjacent inclusions.

If the specimen test shows that the weld is unacceptable as outlined above the Contractor shall bear the full cost of all testing and repairing the pipe where the specimen is removed to the satisfaction of the Engineer.

The Engineer shall have the right to reject any weld if in his opinion the weld defects are detrimental to the strength of the weld. The cost of all radiological inspection shall be borne by the City except when said inspection was at the request of the Contractor.

504.13.00 Permission to Use Water for Construction

Water for "construction purposes" includes water required for dust control, grading and compaction purposes required in utility and road construction. It includes water used for the construction of new landscapes prior to the FAC and excludes water used for irrigation systems.

Water for construction and other purposes not related to fire-protection shall be obtained from Bulk Water Stations located throughout the City.

Where it is not feasible to obtain water from the Bulk Water Stations, a customer may enter into an agreement with The City to access a fire hydrant for a temporary water connection. ***More information can be accessed at calgary.ca and searching "Hydrant Connection Unit (HCU)" or by phoning 311 and requesting a HCU Inspection. Inquiries regarding HCU's or Bulk Water Stations should be directed to 311.***

Authorized hydrant users must connect with an appropriate (HCU) when withdrawing water from a hydrant.

This may be either a Backflow and Meter Assembly (BMA) unit or a Meter Assembly (MA) unit with an approved air gap as detailed on Std. Dwg. 453.1026.003, Sheet #55. These units are available on a rental basis from Water Services as detailed in the "Notice to Hydrant Users" (latest edition). The use and operation of any HCU shall be governed by Clause G.C. 4.45 of The City of Calgary Standard General Conditions (latest edition).

Except for the below noted exceptions, all water taken from a hydrant shall pass through a HCU (Hydrant Connection Unit):

1. A hydrant connection used for firefighting.
2. A hydrant connection used for flushing and chlorinating water main and water services. The minimum backflow protection shall be an Atmospheric Vacuum Breaker (AVB) which must not be in continuous operation for more than 12 hours. The AVB must be installed downstream of the last valve in such a manner that the AVB and hose connection are exposed to the atmosphere.
3. A hydrant connection used for filling City of Calgary Water Services owned, or City of Calgary Water Services authorized and marked vehicles. (These vehicles require an approved built-in air gap).

Development and Commercial Use

The Commercial customer or their authorized representative shall enter into a rental agreement with The City and pay the applicable deposits as detailed in the "Notice to Hydrant Users" (latest edition).

Commercial customers using construction water under a Development Agreement with the City must use a HCU when taking water from the designated hydrant(s).

Prior to the issuance of the Final Completion Certificate (FAC) for water main, hydrants and service connections, the Developer, or their authorized representative, will pay for all associated costs including rental, damage, inspection, and consumption fees.

The Developer is responsible to ensure the use of fire hydrants by all personnel engaged in the construction and maintenance of the subdivision is consistent with these requirements.

When permission is granted, a small diameter (i.e. 20mm or 25mm) connection from a designated hydrant may be permitted to fill an onsite storage tank. The 20mm or 25mm connection may run continuously to fill the tank and meet the contractor's requirements.

Use Restrictions

Hydrants shall not be used to fill vessels that contain chemical(s) or to which chemical(s) will be added. These vessels must be filled at Bulk Water Stations unless specifically approved and permitted by the Director, City of Calgary Utilities Delivery.

Inquiries in connection with Bulk Water Stations and Temporary Hydrant Connections should be directed to the City of Calgary by phone at 311.

No temporary connection shall be made to any hydrant on a closed looped system, (i.e. no reservoir on the system) without the approval of the Engineer. The intermittent use of hydrants in a closed loop system may cause excessive pump cycling resulting in motor failure, increased energy costs and potential loss of water service for domestic use and/or fire protection use. The maximum flow rate that may be drawn from the hydrant for flushing shall be determined and approved by the Engineer.

504.14.00 Concrete Work

504.14.01 Material for Concrete

Portland Cement Type 50 (sulfate resistant) shall be used and shall satisfy the current requirements of CSA A5. Cement alkali content shall not exceed 0.6%. "High-early" strength cement shall not be used. Aggregates shall conform to the latest requirements of ASTM C-33 for concrete aggregate. For maximum aggregate size, the Contractor shall refer to the Drawings for Concrete cover over reinforcing steel. The maximum sizes of aggregate for covers shall be as follows:

40mm clear cover - 25mm aggregate
50mm clear cover - 40mm aggregate
75mm clear cover - 50mm aggregate

In addition to the above requirements, the maximum size of the aggregate shall be no larger than one-fifth (1/5) of the narrowest dimension between sides of the form members for which the concrete is to be used nor any larger than three- fourths (3/4) of the minimum clear spacing between individual reinforcing bars. Water used in concrete shall be potable, clean and free from all materials injurious to concrete. For details of reinforcement see Sec. 504.14.03.

"Pozzolith 3-R", WRDA, or Zelcon shall be used as a diffusing agent for all concrete. Such admixtures shall conform to the requirements of ASTM C494.

An approved air-entraining agent shall be added to all concrete in strict accordance with the manufacturer's Specifications so that the total entrained air content shall be between four (4%) per cent and six (6%) per cent of the total concrete by volume. Such admixture shall conform to the requirements of ASTM C260.

504.14.02 Design Mixing and Control of Concrete

Design shall be in accordance with CSA A23 to produce the strengths specified. Slump shall not exceed 75mm for all concrete unless otherwise specified.

Maximum water cement ratio shall not be greater than 0.49. The Contractor shall provide design mix data verifying that this maximum ratio will not be exceeded during batching. Ready-mixed concrete shall be used for all concrete unless otherwise approved by the Engineer.

Concrete shall be a controlled mix designed to produce concrete having the specified compressive strengths and/or additional properties as specified. Concrete shall be batched at a batching plant where ingredients shall be weighed. Measurements of fine and coarse aggregates shall be made separately by weight. Weighing equipment shall be accurate to within one (1%) per cent of the net load. Water shall be measured by a device accurate to within one (1%) per cent of the total amount required for each batch. Unless otherwise specified, materials shall be proportioned to produce structural concrete with the minimum compressive strength at twenty-eight (28) days of 27.5 MPa (4,000psi.). Plain concrete shall have a minimum compressive strength at twenty-eight (28) days of 17.5 MPa (2,500psi.). Concrete shall be batched at batching plant where ingredients shall be weighed and shall be transported to the site by approved transit-mix trucks. Ready-mixed concrete shall be mixed and delivered in accordance with the requirements set forth in the current "Standard Specifications for Ready-Mixed Concrete" (ASTM C94).

Total elapsed time from dispatch of transit-mix truck to placement of concrete shall not exceed 2 hours. Where this time is exceeded, the Engineer reserves the right to require slump test prior to placement and/or core tests by an approved Geotechnical

consultant to confirm final compressive strength. Where the Contractor elects to proceed with placing over-aged concrete, the Engineer may, at his sole discretion require its removal and replacement should the requested core test results be unsatisfactory.

Mobile batching on site by volume methods may be approved for specific applications and temperature conditions at the sole discretion of the Engineer.

In case of doubt as to the quality of concrete provided by the proposed supplier, or methods of manufacture or transportation, the Engineer may, at his option, order the Contractor to arrange for an acceptable source of supply. The supplier must be approved by the Engineer.

504.14.03 Reinforcing Steel

All reinforcing steel, unless otherwise specified, shall conform to the requirements of CSA G30.12 and G30.16 for new billet steel, grade 400.

Welded wire fabric for concrete reinforcement shall conform to the current "Specification of Welded Steel Wire Fabric for Concrete Reinforcement" CSA G30.5. All fabric shall be supplied in sheet form.

Bent Bar Reinforcement shall be cold bent without the use of heat, to the shapes shown on the Drawings. Bars having cracks or splits on the bends shall be rejected. All bars shall be bent to dimensions shown on the Drawings and/or in accordance with ***ACI Detailing Manual, ACI MNL-66 (latest edition).***

Bar reinforcement shall be shipped in standard bundles easily identifiable and marked in accordance with the bar lists.

Reinforcing steel shall be stored on racks or skids above grade so that it is protected from dirt or injury and will keep its fabricated form.

Reinforcing steel at the time concrete is placed shall be free from loose or flaky rust, scale, mortar, paint, oil, mud, or other foreign substance, which will destroy or reduce bond.

Prior to placing of concrete, the reinforcement shall be inspected by the Engineer. If further cleaning is required, it shall be by a method satisfactory to the Engineer.

If there is any doubt as to the nature and quality of the reinforcing steel, the Contractor shall supply the Engineer with results of tests made on the steel, and, at the Engineer's discretion, a certified mill copy of mill tests showing physical and chemical analysis at the Contractor's expense.

Reinforcing shall be placed as shown on the Drawings and shall be firmly and securely held in position by wiring at all intersections with annealed iron tie wire of not less than 18 gauge.

Reinforcing shall be held in position by the use of metal chairs, spacers, metal hangers, supporting wires and other approved devices of sufficient strength to resist crushing or collapse under full load.

The use of pebbles, pieces of broken brick or stone, metal pipe and wooden blocks will not be permitted. Placing bars on or in layers of fresh concrete as the work progresses will not be permitted.

For slabs on ground, and similar construction utilizing WWF, concrete or cement blocks may be used in place of metal chairs but must conform to the spacing requirements of ACI ***MNL-66***. For structural slabs, beams, etc., on ground, reinforcement must be adequately supported (ACI ***MNL-66***) on "Superior Slap Bolster with Runners - SBR" or approved equal.

Bars shall be carefully spaced as shown on the Drawings. In no case shall the clear distance between bars be less than I 1/2 times the maximum size of the coarse aggregate. Beam stirrups and column ties shall be accurately located to the dimensions on the Drawings.

The metal reinforcement shall be protected by the thickness of concrete indicated on the Drawings. Where not indicated, the minimum thickness of the concrete over the reinforcement shall be as follows:

Unformed concrete against ground	75mm
Formed concrete exposed to the weather or in contact with the ground when using larger than 200mm bar	50mm
Formed concrete exposed to the weather or in contact with the ground when using 200mm bars and smaller	40mm
Concrete protection for beam stirrups	40mm
Concrete protection for column ties	40mm

All reinforcement shall be placed in the full lengths called for on the Drawings. No splicing of bars, except whereas shown on the Drawings, will be permitted without the approval of the Engineer.

Where splicing has been approved, adjacent bars shall not be spliced at the same point. Splices shall provide sufficient lap to transfer the stress between bars by bond and shear. Unless otherwise indicated on the Drawings, tension splices shall be avoided, and if approved by the Engineer, shall be not less than 36 bar diameters.

All other splices shall be lapped not less than 24 bar diameters, with a minimum 300mm in length. All splices shall be securely tied together with annealed iron tie wire of not less than 18 gauge.

Sheets of mesh or bar mat reinforcing shall overlap each other sufficiently to maintain a uniform strength and shall be securely fastened at the ends and edges.

The edge lap shall not be less than one mesh in width plus 50mm. Where welding of reinforcing bar is necessary, the requirements assuring weldability conforming to AWS D12.I "Recommended Practices for Welding Reinforcing Steel, Metal Inserts and Connections in R/C Construction" must be followed. Only low hydrogen electrodes shall be used.

Column and wall dowels shall be the same size and number or spacing as the column or wall reinforcing unless indicated otherwise. Lap lengths shall be as required in "splices" unless indicated otherwise on the Drawings. It is imperative that all dowels be rigidly supported until the concrete has adequately cured. This requirement will be rigidly enforced.

All electrical conduits and other piping to be embedded in concrete slabs shall be covered with a 610mm wide strip of 4 x 4 x 8/8 W.W.F. before concrete placement.

Horizontal corner bars shall be placed in walls so that the horizontal wall reinforcing will be continuous around the corner. A minimum of five 200mm bars shall be placed at all corners of slabs cast with walls or beams, unless otherwise indicated.

Unless otherwise shown on the Drawings, two corner bars (one on each face) shall be placed across each corner of every opening but shall not be less than 1.2 meter in length.

They shall be of the same size as the main reinforcing if in a slab and 200mm bars if the opening is in a wall. These bars shall be placed making an angle of 45 degrees with the side.

The Contractor shall make adequate provision in the forms to support plates, anchor bolts, "Parti-Lok Strainers", sleeves and other inserts to be imbedded in the concrete at dimensions and elevations shown on the Drawings.

Unless otherwise indicated, inserts shall be of the "Universal Type, Malleable Threaded Insert 200mm, or approved alternate, with an allowable working load of 680kg per insert.

504.14.04 Concrete Formwork

All formwork for concrete shall be designed to sustain safely the construction load or any superimposed load that it may be subjected to. Forms shall conform to the shape, lines and dimensions of the member called for on the Drawings and shall be substantially rigid to eliminate deflection and sufficiently tight to prevent leakage of mortar. They shall be properly braced or tied together to maintain their position and shape.

Where concrete forms are required to resist unusual loads or pressures or have unusual conditions, these forms, shoring and bracing shall be designed by a suitably qualified professional engineer, employed or retained by the Contractor. Chamfered edges shall be provided for all exposed edges of columns, walls and beams and are to be kept as small as practical.

Unlined forms for unexposed concrete surfaces or surfaces that will receive a plaster finish shall be a good grade of form lumber free from defects that would impair its strength. Square edged lumber may be used if the edges are driven tight together so that there will be no leakage of mortar. All forms shall be built in place and the boards shall be truly horizontal. Unlined forms shall be thoroughly soaked with water before placing concrete against them.

Plywood (Canfor 25 + Formply, or Sylvacote Plygard), or steel forms shall be used for exposed concrete. The inside of the form lining which will be in contact with the concrete shall be taped with pressure sensitive tape prior to being coated with non-staining mineral oil or an approved form coating compound. The oil or form coating shall be applied before the reinforcement is placed in the forms.

Where a paint finish is called for "Noxcrete" form coating shall be used in lieu of the oil coating. (All walls in contact with water shall be regarded as exposed concrete). Lumber or plywood once used in forms shall have nails withdrawn and surfaces to be in contact with concrete thoroughly cleaned before being used again but shall not be used for other permanent construction without the written consent of the Engineer.

Supports for forms shall be constructed so that they will not deflect under the weight of the wet concrete and other loads incident to construction. Shores supporting forms for slabs, beams, etc., shall be set on wedges or other approved supports in order that they may be removed without producing undue strain or shock in the superstructure.

Temporary openings shall be provided at the base of columns, wall forms and other places where necessary to facilitate cleaning and inspection.

These openings shall be placed so that water and remaining debris shall have a clear run to the outside of the form. All forms must be cleaned of all foreign matter prior to concrete placement.

Form ties shall have a minimum working strength when fully assembled of at least 1360kg (or greater if required), and shall be the plastic cone type, 25mm diameter and 25mm long. All ties used for walls below grade, or which will be in contact with water shall be the "Waterseal" type. After removal of the cone, the holes shall be filled with grout and the surface left smooth.

Form-work openings requested by the Contractor, and approved by the Engineer, to facilitate removal of forms from within structures, shall be regarded as the responsibility of the Contractor, at no extra cost to the City.

Forms shall be removed in such a manner as to ensure the complete safety of the structure. No form shall be removed until the concrete has gained sufficient strength to safely carry its own weight together with any superimposed load that may come upon it.

In the determination of the time of removal of false-work, forms, shores, etc. and the discontinuance of heating, consideration shall be given to the location and character of the structure, the weather and other conditions influencing the setting of the concrete, and the materials used in the mix.

Where the structure, as a whole, is adequately supported on shores and the concrete has gained sufficient strength (at least 80% design strength) the removable floor forms, beam sides, column and similar vertical forms may be removed after seven (7) days. In this case, the shoring at the centerline of spans must be left in place for twenty-eight (28) days. If a concrete floor is supporting shoring for the floor above, forms for the bottom floor shall be left in place not less than twenty-eight (28) days.

504.14.05 Placing of Concrete

Concrete shall be conveyed from the transit-mixer to the place of final deposit by methods that will prevent the separation or loss of the materials.

Equipment for chuting, pumping, and conveying concrete shall be of such size and design as to ensure a practically continuous flow of concrete at the delivery end without separation of materials (ACI ***PRC-304 (latest edition)***).

All equipment shall be cleaned of foreign materials before placing concrete and shall be cleaned at frequent intervals during concreting. Concrete shall be deposited as nearly as practicable in its final position to avoid segregation. The work shall be carried out at such a rate that the concrete is at all times plastic and flows readily into the space between the bars.

Delivery carts or buggies shall be kept on temporary runways built over the floor system. Runway supports shall not bear on reinforcing steel or fresh concrete. Under no circumstances shall concrete that has partially hardened or has been contaminated by foreign materials be used in the work. Re-tempering of concrete will not be allowed. When concrete pouring is started, it shall be carried out as a continuous operation until the placing of the section is complete.

Concrete shall be thoroughly compacted by puddling with suitable tools during placing operations. Concrete shall be thoroughly worked around reinforcement, embedded fixtures, and into the corners of the forms.

All concrete shall be compacted by vibration. Internal vibrators shall be capable of transmitting vibration to the concrete at frequencies of not less than 7,000 impulses per minute when fully immersed in the concrete and shall be applied at the point of deposit in an area of freshly placed concrete. The vibration shall be of sufficient duration and intensity to thoroughly compact segregation or to the extent that localized areas of grout are formed. Application of vibrators shall be at points uniformly spaced and no further apart than twice the radius over which the vibration is visibly effective. To ensure even, dense surfaces, vibration shall be supplemented by hand spading in the corners of the forms.

Flat slabs shall be compacted with either a vibrating screen or an internal vibrator. Vibrator points for an internal vibrator shall be on 510mm centers in a staggered line. Concrete in walls and columns shall be compacted by internal vibration and external vibrators shall only be used when the sections are too small for the internal vibrator, unless otherwise specified. External vibration shall be applied only long enough to embed the coarse aggregate and bring enough mortar to the surface for satisfactory finishing.

Concrete in walls and columns shall be placed so that the unrestricted drop of concrete shall not exceed 1.8 meters. In excess of 1.8 meter (6 feet) use must be made of chutes or trunks in such a manner as to prevent segregation of the materials. Concrete in walls shall not be raised at a rate of more than 1.0 meter per hour with individual horizontal layers not exceeding 300mm in depth, unless approved otherwise.

Pouring concrete during rain will not be allowed. Freshly poured concrete surfaces shall be protected from rain until the initial set occurs. Concrete shall not be poured in water or on wet surfaces, unless otherwise approved by the Engineer.

Construction joints shall be placed as indicated on the Drawings.

The Contractor shall apply to the Engineer for approval of any construction joints that are not indicated on the Drawings as it is imperative that joints are made and located as to least impair the strength and water tightness of the structures.

Where a joint is to be made, the surface of the concrete shall be thoroughly cleaned and all laitance removed. All hardened surfaces shall be thoroughly wetted and, in addition, vertical joints shall be thoroughly wetted and sloshed with a coat of neat cement grout immediately prior to the placing of new concrete. A delay at least until the concrete is no longer plastic must occur in columns or walls before concreting beams, girders, or slabs thereon.

Joints in contact with ground water must be provided with a formed key, water stop and dowels. Water stops shall be continuous (fused joints acceptable). Joints not in contact with ground water may have the water stop removed and shall be keyed with "Burkes Kold-Key" or approved alternate. Expansion and fixed joints shall be constructed in accordance with the details shown on the Drawings.

504.14.06 Testing

The Contractor shall provide concrete test cylinders, as the Engineer requires. The cylinders shall be stored in accordance with ASTM C31 ***(latest edition)*** and tested in accordance with ASTM C39 ***(latest edition)***. Not less than four cylinders shall be made for each test in winter, and not less than three in ordinary weather***. At least one concrete test shall be performed per*** 38 cubic meters of concrete poured. One cylinder shall be left in the structure to check the curing of the concrete and the other three cylinders shall be laboratory tested to check the strength of the concrete as placed. The strength of all cylinders shall be equal to or greater than the strength

specified, and where there is a question of the quality of the concrete the Engineer may order the Contractor to secure at his expense, specimens of the hardened concrete represented by the cylinders. The number of these specimens shall equal the number of laboratory test cylinders taken during the pour and shall be secured and tested in accordance with ASTM C42 ***(latest edition)***. If these tests further substantiate that the concrete is below the strength specified herein, the Engineer may order such concrete removed and rebuilt at the expense of the Contractor. Payment for taking test cylinders, storage and laboratory tests shall be included in the unit cost for the structure.

504.14.07 Curing

The exposed surface of the concrete shall be protected from the sun and from the air by an approved membrane curing material. Curing shall be accomplished by coating the entire exposed surface of the concrete with a liquid compound immediately after the concrete has received its finished treatment.

Thrust Blocks cure times are at the discretion of the Engineer based on thrust block sizing, site conditions, ambient temperature, project requirements, etc. A base cure time of 24 hours can be assumed and modified from there. For curing methods of poured structural concrete, see 403.11.05 in the Standard Specifications Sewer Specifications.

504.14.08 Cold Weather Concrete

No concrete shall be placed when the temperature is below +5 ^{0}C except with the authority of the Engineer. Where this authority is granted by the Engineer, concrete in the forms shall have a temperature of not less than +21 C or more than +27 ^{0}C when placed. Forms shall be adequately protected to maintain placed concrete in a moist condition at a temperature not more than +21 C for 3 days, or +10 C for 5 days, with a maximum temperature not to exceed +38 C. Before concrete is placed in any form or around any reinforcement or any surface, all ice, snow, and frost shall be completely removed and the temperature of all surfaces to be in contact shall be raised above the freezing point. No concrete shall be placed on a frozen sub-grade or on one that contains frozen materials.

504.15.00 Restoration

504.15.01 Restoration of Pavement, Sidewalks, Curbs & Gutters

All restoration of pavement sidewalks curb and gutters shall be carried out in conformity to the Standard Specifications Roads Construction, City of Calgary.

504.15.02 Restoration of Grassed Areas

All restoration of land owned and/or maintained by the Parks Department shall be restored and inspected in accordance with the Development Guidelines and Standard Specifications for Landscape Construction, Parks Department, City of Calgary.

504.16.00 Utility and Tree Clearances

Clearance between the Water Resources utilities shall be as follows:

Horizontal:

- Hydrant leads and water/sewer services shall be separated from catch basins and manholes by a minimum of 2.0 meters. Lesser separation may be permitted upon approval of a frost protection design.
- Water, sanitary and storm mains shall maintain a minimum separation of 2.5 meters unless otherwise approved. Lesser separation may be permitted upon approval of a frost protection design.
- Where approved by the Engineer, dual parallel watermains may be installed with a separation of 2.0 meters.
- Frost penetration modelling may be a requirement of approval

Vertical:

There shall be a minimum vertical separation of 300mm between water, sanitary and storm mains at crossings.

Where the vertical separation of 300mm cannot be met, a supported pipe crossing is required see Sheet 41: Pipe Support at Utility Crossing.

504.16.01 Clearance to Electrical Facilities

The minimum separations between Utilities Delivery facilities and Enmax facilities shall be as follows unless otherwise approved by the Engineer:

Facilities	Minimum Separation
Hydrant and Service Pipe & Valves to the center line of TELUS and Cable pedestal	2.5 m
Hydrant and Service Pipe & Valves to the center line of Street Light Standards	2.5 m
Hydrant and Service Pipe & Valves to the edge of Transformer, Pull Box/Junction Terminals, etc.	2.5m

In Subdivision construction, which is carried out under a Development Agreement, the developer's Consultant is responsible for coordinating the Enmax and Utilities Delivery facilities to ensure compliance with all regulatory and safety codes including the above separation requirements.

504.16.02 Clearance to Trees

The setback of trees from curb and sidewalk shall be as noted in the typical road cross sections contained in Appendix D of the Design Guidelines for Subdivisions. Where trees are planted on Public property in proximity to a water service valve, a minimum 1.25 meter clearance between the trunk of a smaller variety Fruit and Flowering or Columnar tree is required. When a larger variety Shade or Coniferous tree is planted, the clearance between the service valve and the trunk shall be a minimum of 2.5 meters. These clearances are also recommended for private trees in proximity to a water service valve. Tree types/sizes are classified as per the Parks Urban Forester. These clearances are required to facilitate future access for operation, and repair or replacement of the water service valve as required.

Trees on residential (15.0m R/W) boulevards, with no sidewalks, can be planted 1.0m from driveways. The minimum separation between trees and utilities shall be as shown in the table below:

Buried Utilities	**Deciduous** (Except Poplar)			**Conifer**			**Poplar**	
	Services		Mains	Services		Mains	Services	Mains
Depth	median	blvd	parallel to trees	median	blvd	parallel to trees		parallel to trees
Sanitary (<4.5 m deep)	0m**	2.5m	3.0m	0m**	3.0m	4.0m	3.0m	4.0m *
Storm (<4.5 m deep)	0m**	2.5m	3.0m	0m**	3.0m	4.0m	3.0m	4.0m *
Water	0m**	2.5m	3.0m	0m**	3.0m	4.0m *	3.0m	4.0m *
Hydrants	N/A	2.5m	3.0m	N/A	3.0m	4.0m *	3.0m	4.0m *

* A 3.0m separation may be permitted at the discretion of the utilities.

** Pipe joints are not permitted on water or sewer services located under medians.

Definitions:

Deciduous - Trees shedding leaves annually.

Conifer - Cone bearing trees such as pine and spruce.

Poplar - Trees of the Willow family having rapid growth.

504.16.03 Tree Removal

Existing trees shall not be removed unless authorized by the Urban Forester, Parks Division. See the City of Calgary Parks & Recreation Department, Development Guidelines, and the Standard Specifications Parks Landscape Construction.

505.00.00 COATING SPECIFICATIONS

505.01.00 Coating Specifications for Castings

505.01.01 General

Specific elements as specified and detailed throughout these Specifications require the application of one of the following coating systems.

The surface quality of castings shall conform to Section 503.02.02. The City Engineer and/or the Coating Applicator may reject any castings which do not conform to these Specifications.

Coatings shall be pinhole free when tested with a wet sponge holiday detector set at approximately 70 volts, or if pipeline coating, "jeeped" as per NACE SP0490 All pinholes shall be marked, repaired, and re-tested to ensure a holiday free coating.

All coating shall be factory applied by the product Manufacturer or by a specialized coating firm approved by the Engineer. All coated elements shall carry a label identifying the name of the coating applicator.

Type "A" Coating Applicators:

Calgary Powder Coatings, Calgary
CSI Coating Systems Inc., Nisku
Canada West Coatings, Calgary
Garneau Inc., Nisku
JIT Powder Coaters, Calgary
Pepco Tubular Services Ltd. Edmonton
Powderful Custom Coatings, Calgary
ProTek Surface Technologies, Winnipeg

Type "B" and "C" Coating Applicators only:

ABACAL Fleet Finishing, Calgary
Air Pac Enterprises Ltd., Calgary
Clow Canada, St. John, NB
Masterkote Lining Services, Nisku,
Calgary Pro Coat Coatings Ltd., Calgary
Western Blastmasters Ltd., Calgary
Quality Coating & Blasting Inc., Calgary
Wheatland Blasting, Strathmore
D&J Sandblasting. Calgary

The City of Calgary reserves the right to inspect all coating operations. Inspections by the City will be carried out on a random and periodic basis to ensure that coating materials, surface preparations and applications are in accordance with these Specifications.

505.01.02 Type A Coating System

Fusion-Bonded Coating:

Unless otherwise specified the materials and application of this coating shall conform to the AWWA C116 ***(latest edition)***. The coating material shall be a 100% solid, thermosetting, fusion bonded, dry powder epoxy resin, approved for contact with potable water by the National Sanitation Foundation (NSF61).

Powders shall be one of the following products or approved equal:

Valspar, D 1003 LD & G 1003-RB, Nap-Gard Mark X 7-2500 & 7-2508, 3M, Scotchkote 134, Scotchkote 206N or approved equal.
Plascote PPA 571HES*, Water Armor G17* (castings only*)

The surface preparation shall conform to Sec. 3.2 of the AWWA C116 ***(latest edition)*** Standards. These coatings shall be applied to a preheated surface by the fluidized bed method or the electrostatic powder spray gun method. Epoxy coating thickness shall be 20 mils, plus or minus 5 mils maximum and shall be holiday free.

Coating thickness inside gasket grooves and on exterior pipe ends that receive coupling gaskets may be reduced to 15 mils as required by manufacturers published jointing tolerances.

100% solids Epoxy and Urethane Coatings:

The coating material shall be a 100% solid or low VOE epoxy or urethane. Interior coatings shall be approved for contact with potable water by the National Sanitation Foundation (NSF61).

Exterior coating thickness shall be 20 mils minimum, 45 mils max. Interior coating shall be 20 mils minimum 40 mils maximum.

Coating thickness inside gasket grooves and on exterior pipe ends that receive coupling gaskets may be reduced to 15 mils as required by manufacturers published jointing tolerances.

Interior linings shall be NSF61 listed. Coatings and linings shall be Lifelast, Specialty Polymer Coatings, Devoe or an approved equal and shall be holiday free.

The surface preparation shall conform to Sec. 3.2 of the AWWA C210-15 Standards. The coating application shall be carried out in strict conformity to the Manufacturers' published instructions. The surface temperature shall be at least 3 C above the dew point temperature, but not greater than 150 C. The applicator shall use a surface thermometer and sliding psychrometer to monitor these temperature requirements.

505.01.03 Type B Coating System

The external coating material shall be one of the following or an approved equal:

Liquid Epoxy Coating Systems
Valspar Corrocoat II, Carboguard 891
Bar-Rust 233H, Amerlock 400, or approved equal

The coating materials shall be applied with spray equipment in accordance with the coating Manufacturer's Specifications and AWWA C210 and shall be holiday free. Exterior coating thickness shall be 20 mils minimum, plus/minus 5 mils. Interior coating shall be 15 mils minimum plus/minus 5 mils. Interior linings shall be NSF61 listed.

505.01.04 Type C Coating System

This exterior coating system shall consist of a Type A or B coating system and a finish (color) coat application. The finish coating material shall be a single component, liquid Alkyd Enamel or a single component liquid modified polyurethane copolymer. Coatings shall be one of the following products or approved equal:

Valspar, M & F Enamel 20 Series
Carboline, Admiral GP-62 Finish
Carboline 139, Amercoat 5450, or approved equal

This coating material shall be applied over the Type A or B coating system with surface preparation and/or primer as required by brush or spray equipment in accordance with the coating Manufacturer's Specifications to a minimum thickness of 3-5 mils.

505.02.00 Coating Specifications for Ductile Iron Pipe

Ductile Iron Pipe shall be coated in conformity to approved Urecon or Thermacor PE proprietary coating systems or Shaw Pipe Protection Specification #5 as follows:

- 0.4mm (16 mils) of mastic, primer or inter-tape shall be applied evenly over the pipe surface. The end of the bell, the spigot end to 25mm back of the rubber gasket stripe and the conductivity strip shall be masked prior to applying the sealant. The sealant shall be a polymerized rubber-blended compound applied at carefully regulated temperatures and shall be of uniform thickness.
- A minimum of 1.5mm (60 mils) of high-density polyethylene jacket shall be extruded evenly over the pipe immediately after the primer or inter-tape has been applied. A tolerance of plus or minus 0.5mm (±20 mils) in the polyethylene thickness will be permitted.
- The pipe shall be jeeped immediately after coating at ***100 Volts per mil of coating per NACE SP0188 or at the test voltage recommended by the coating manufacturer*** to detect any holidays in the coating. Defective coating shall be repaired in accordance with Sec. 505.03.00.
- The sealant and polyethylene shall be removed from the spigot end of the pipe to 25mm back of the gasket stripe marked on the iron pipe.
- The date of the coating application shall be stamped on the coating.

505.03.00 Field Applied Coating and Wrapping

Specific components, and installed elements as specified and detailed throughout these Specifications shall be field coated and wrapped and damaged factory applied coating shall be repaired with materials listed below in conformity with the Manufacturer's Specifications.

1. Tape Wrapping of Ductile Iron Pipe (where approved by the Engineer), Welded Joints, Repairs to Yellow Jacket, PE Tape Wrap or Coal Tar Coatings (or approved equal)

Primer (or approved equal)	Tape (or approved equal)
Royston 747	Greenline Accessory
Polyken 1027	Polyken 930
TC Coldprimer	Tape Coat CT
TC Coldprimer	Tape Coat 10/40
Polyguard 600	Polyguard 600, ***Kema 250 & 250-12***
Renfrew 327	Renfrew 330 & 330L – 35

Heat Shrink Wrap-around Sleeves for Yellow Jackets Steel and Ductile Iron (or approved equal)

Raychem:	WPC 2.0-1.0 E50, pipe sizes 150 & 200mm WPCM, pipe sizes 250 to 400mm
Canusa Aqua Shield:	HS-40, all pipe sizes KTS-45C, KTON-65-C, all pipe sizes

2. Ductile Iron Pipe and Spigot Joints

Primer (or approved equal)

Denso Paste
Petro Primer
Petrocor
Prempaste
PetroGuard
Trenton
STOPAQ Wrappingband CZ/ CL/ SZ

Tape (or approved equal)

Denso, Denso LT
Petro Wrap LT
Petrocor Petroleum Tape
Premtape LT
PetroGuard LT
Trenton Tec-Tape
STOPAQ Outerwrap PE / HSPE

Heat Shrink (or approved equal)

Canusa: WLOX-65 High Shrink Sleeve
Wrapid Primerless Tape

3. Couplings, Joint Restraints, Flanges and MJ Joints, Services, and Threaded Bolting Surfaces

Appropriate mastics, mastic blankets, fillers, over-wraps, and rock-shields from the listed manufacturers are required for these applications by the Engineer.

Primer (or approved equal)

Denso Paste
Trenton
Petrocor
Prempaste
Petro Primer
Petro Coating Systems
STOPAQ 4100 Putty, 4200 Filler, Paste CZ/SZ*

Tape (or approved equal)

Denso, Denso LT
Trenton Tec-Tape
Petrocor Tape
Premtape LT
Petro 40, Petro Wrap LT
PCS LT
****With approved STOPAQ Wrappingband and Outerwrap products***

Heat Shrink (or approved equal)

Canusa WLOX-65 High Shrink Sleeve

4. Repair of External Fusion Bonded Epoxy (FBE) Coatings on Fittings, Hydrant Barrels, Valve Boxes and Casings

Apply one of the following products according to the manufacturers' guidelines:

Scotchkote:	314, 202P Hot Melt Patch Compound
Canusa:	Melt Stick, Repair Patch, Wrapid Tape
Nap-Gard:	Red E-Z Patch Stick

or Tape Wraps with primer and tape as specified in 505.03.00

LIST OF STANDARD DRAWINGS

Hydrants	**Std. Drawings**	**Sheet #**
Hydrant Details	453.1002.001	1
Precast Concrete Hydrant Pad	453.1002.002	2
Special Hydrant Signs	453.1002.003	3
Distribution Valves		
Top, Bottom Box & Casing 100-200mm Valves	453.1006.006pt1	4
Valve Box Lids (Standard and Deep)	453.1006.006pt2	4A
Bottom Box for 250-400mm Valves	453.1006.009	5
Valve Box Adaptors for Crown Surfacing	453.1006.007	6
Valve Control Discs	453.1006.001	7
Valve Anchoring Details	453.1006.008	8
Cathodic Protection		
Thermite Weld Process	453.1017.002	9
Electrical Conductivity Strip for Tyton Joints	453.1008.003	10
Electrical Conductivity Strips	453.1017.004	11
Typical Test Point Installation for Impressed Current Cathodic Protection	453.1017.003	12
Typical Cathodic Protection on Watermain Replacements & Extensions	453.1017.001	13
Test Point for Dead End Mains in Cul-de-Sacs	453.1017.005	14
Cathodic Protection (C.P) for Metallic Carrier in Sealed Steel Encasement Pipe	453.1017.006	15
Cathodic Protection (C.P) for Non-Metallic Carriers in Steel Encasement Pipe	453.2002.001	15A
Carrier & Encasement Pipe – Installation Specific Details (Pt. 1)	453.1017.007	16
Carrier & Encasement Pipe – Installation Specific Details (Pt. 2)	453.2003.001	16A
Typical Test Point at Isolating Elements	453.1017.008	17

Typical Test Point at a Hydrant Metallic Pipe	453.1017.009	18
Reclaimed Water System Rod Top Nut	453.1017.010	19
Typical Test Point for Cathodic Protection	453.1017.011	20

Service Connections

Service Connection Details for Sanitary Manhole in Cul-de-Sac	453.1001.016	21
Sewer Service Connections to Mains	453.1003.008	22
Typical Presidential Service Installation	453.1003.001	23
Standard Backfilling for Services	453.1003.002	24
Operating Rod for 20-50mm Service Valves (Type A & Type B)	453.1006.015	25
Service Valve Operating Assembly for 20-50mm Valves	453.1033.001	26
Servicing Requirements for Apartments, Multi-Family and Commercial	453.1026.001	27
Parks Water Service Detail 50 & 150mm	453.1030.001	28

Meters

Typical Meter Installation Size 15-25mm	453.1009.006	29
Typical Vertical Meter Installation Size 15-25mm	453.2000.001	29A
Typical Residential Fire Sprinkler Connection	453.2001.001	29B
Typical Laneway/Garden/Residential Suite Meter Detail	453.2002.001	29C
Typical Bank Metering Size 15-25mm	453.1009.007	30
Alternate Bank Metering 15-25mm	453.1009.007pt1	30A
Typical Bank Metering Size 40-50mm	453.1009.007pt2	30B
Typical 40 & 50mm Meter Installation	453.1009.008	31
Compound or Turbine Meter Installation 75mm and Larger	453.1009.009pt1	32
Water Service Entry 100mm and Larger	453.1009.009pt2	33
Meter Vault, Compound Meters for 75mm & Larger Meters	453.1009.002	35
Meter Vault, Domestic Turbine Meters for 75mm &	453.1009.003	36

Larger Meters		
Meter Vault, Fire Turbine Meter for 100mm & Larger Meters	453.1009.004	37
Meter Vault, Detector Turbine Meter for 100mm & Larger Meters	453.1009.005	38
Miscellaneous		
Bedding Classifications	453.1003.003	39
Bedding & Backfill Details (Pipe Zone)	452.1050.001	39A
Pipe Anchor on Steep Grades, 400mm & Smaller Mains	453.1003.004	40
Pipe Support at Utility Crossings	453.1003.005	41
Thrust Blocks	453.1003.007	42
Manhole for 150 & 200mm Check Valves	453.1006.003	43
Dual servicing for Single and Semi-Detached Lots	453.1047.001	44
PRV Chamber, PRV with Bypass	453.1038.001	45
Standard Water Manhole Cover	453.2005.001	46
Standard Water Cover Lockout System	453.1012.006	46A
Welded Joints for Steel Pipe	453.1020.005	47
Typical Notice of Service Interruption	453.1032.001	48
Alberta Survey Control Monument Protection	481.1002.001	49
Legal Survey Control Typical Sidewalk Manhole Installation	481.1007.001	50
Legal Survey Control Typical Roadway Manhole Installation	481.1008.001	51
Watermain Replacement at Reduced Depth (Aggrelite™, Granulite™)	453.5003.011	52
Cellular Concrete Installation Horizontal Layer	453.1042.001	53
Cellular Concrete Installation Pipe Surround	453.1041.001	54
Temporary Hydrant Connections for Water Hauling Truck	453.1026.003	55
Clay Plugs & Weeping Holes at Storm Manholes	452.1005.006	56
Typical Tracing Wire Layouts for PEX Services	453.1031.003	57

Polyethylene Pipe Restraint	453.1031.004	58
Portable or Free-Standing Construction Sign	453.1018.001	59
50mm Flushing Assembly Type “A”	453.1043.001	61A
50mm Flushing Assembly Type “B”	453.1043.002	61B
100mm Flushing Assembly Type “C”	453.1043.003	61c
Styrofoam Insultation Inverted U	453.1044.001	62
Styrofoam Insulation Horizontal Layer	453.1045.001	63
Large Diameter Storm Styrofoam Insulation	453.1046.001	64

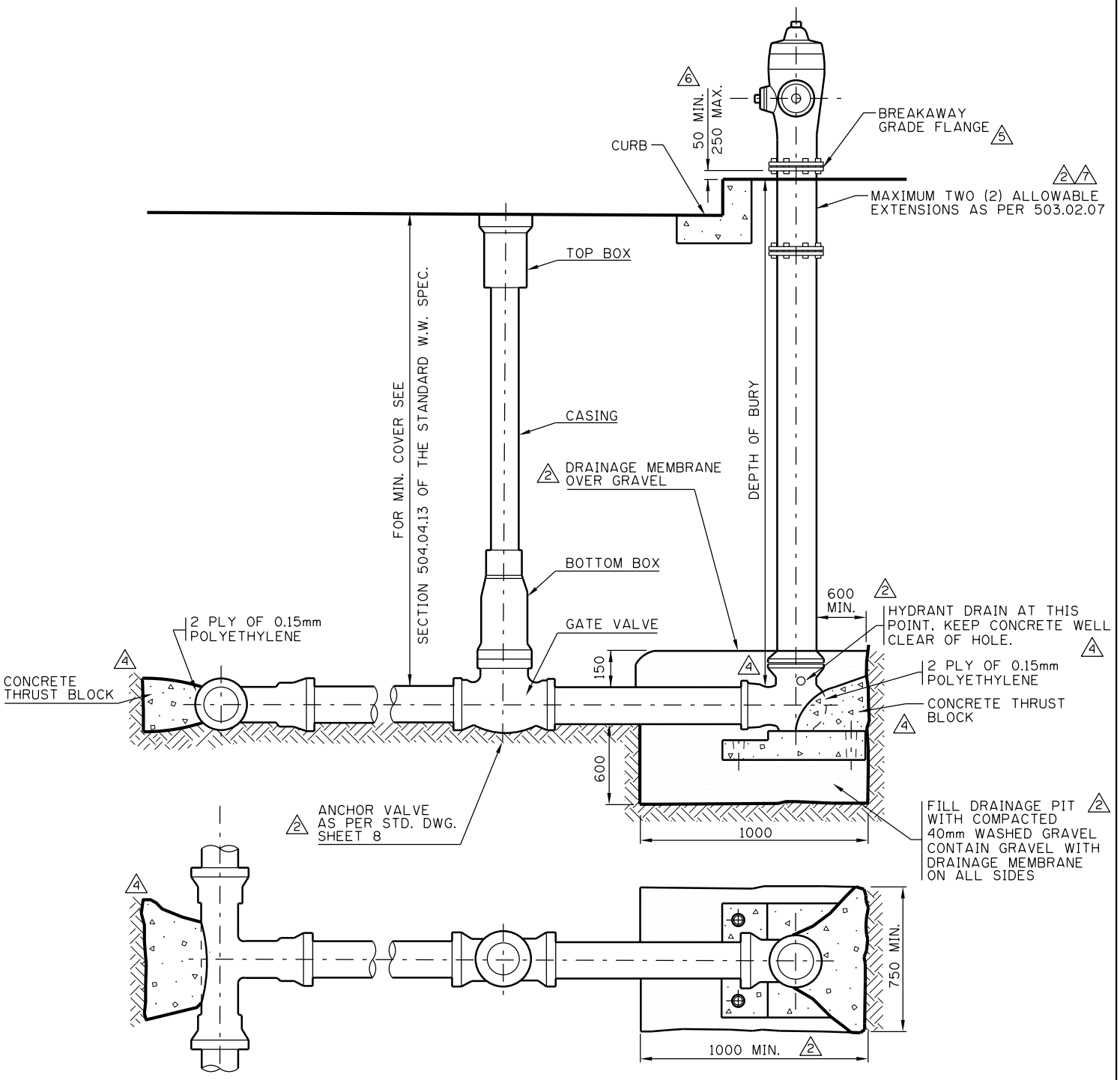

NOTE:

1. THE EXTERIOR OF THE HYDRANT SHALL BE COATED AS SPECIFIED IN SECTION 503.02.00
2. HYDRANTS IN HIGH WATER TABLE MAY BE REQUIRED TO HAVE DRAINS PLUGGED, BE PAINTED RED AND MARKED, "FOR FIRE USE ONLY"
3. THE HYDRANT SHALL BE PLACED ON A CONCRETE PAD AS SHOWN IN DRAWING 453.1002.002.
4. DRAINAGE MEMBRANE SHALL BE PLACED OVER THE TOP OF THE STONES TO PREVENT THE SPACES BETWEEN THE STONES FROM BEING FILLED WITH CLAY.
5. INSTALLATION, SEE 504.05.00.
6. PLACE 2 PLY OF 0.15mm POLYETHYLENE BETWEEN PIPE AND POURED CONCRETE.
7. CONCRETE SHALL BE SULFATE RESISTANT, 20 MPa @ 28 DAYS.
8. DRAINAGE MEMBRANE, SEE SEC. 319.00.00 STD. SPEC. ROADS CONSTRUCTION.
3 9. FOR CATHODIC PROTECTION REQUIREMENTS SEE SECTION 504.07.00

DIMENSIONS ARE IN MILLIMETRES
UNLESS OTHERWISE NOTED

No.	Date	Revision	App'd
7	2022/03/01	REVISED NOTE	D.N.
6	2017/01/10	ADDED MIN./MAX. DIMENSION	B.N.
5	2009/04/24	REVISED NOTE	B.N.
4	2007/12/20	REVISED DRAWING & NOTE	B.N.
3	2006/02/09	ADDED NOTE	B.N.
2	2005/02/07	DELETED NOTE No. 4. REVISED & ADDED NOTES	B.N.

Date 1994/12/16
Scale N.T.S.
Approved by
for The City of Calgary

WATERWORKS CONSTRUCTION

HYDRANT DETAILS

Sheet 1
File Number 453.1002.001

ISC: Unrestricted

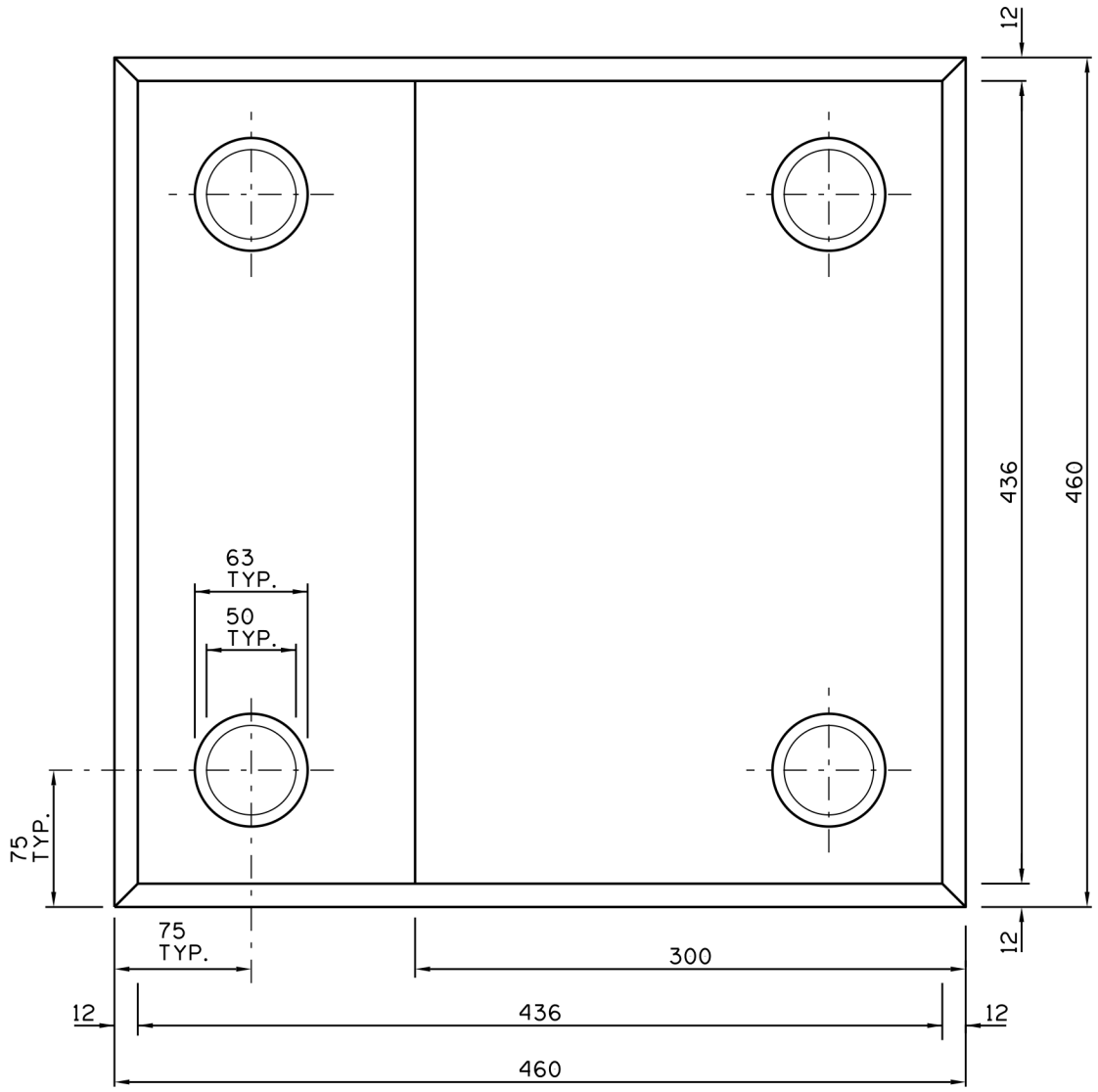

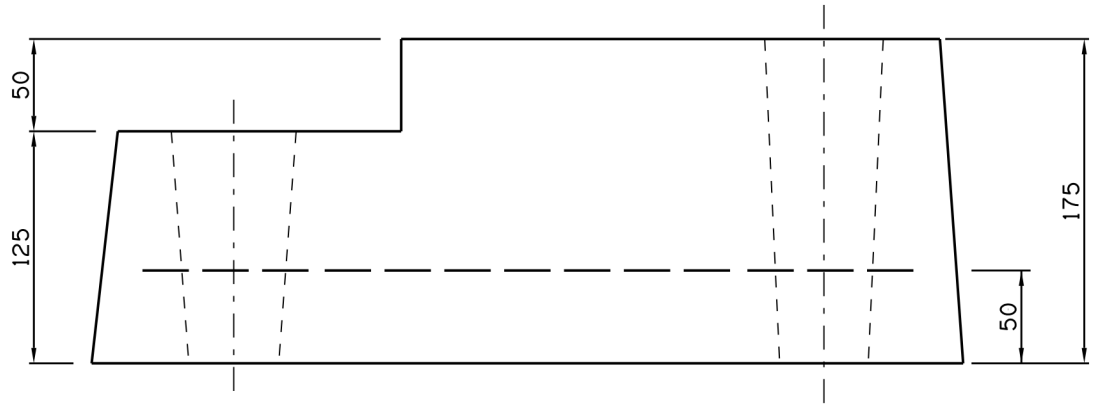

NOTES:

1. CONCRETE SHALL BE 20 MPa @ 28 DAY STRENGTH.
2. CONCRETE SHALL BE SULFATE RESISTANT.
3. 102 X 102 W16.7/W16.7 WIRE MESH.

DIMENSIONS ARE IN MILLIMETRES
UNLESS OTHERWISE NOTED

No.	Date	Revision	App'd

Date 1987/11/27
Scale N.T.S.
Approved by
for The City of Calgary

THE CITY OF CALGARY WATERWORKS CONSTRUCTION

PRECAST CONCRETE HYDRANT PAD

Sheet 2

File Number 453.1002.002

ISC: Unrestricted

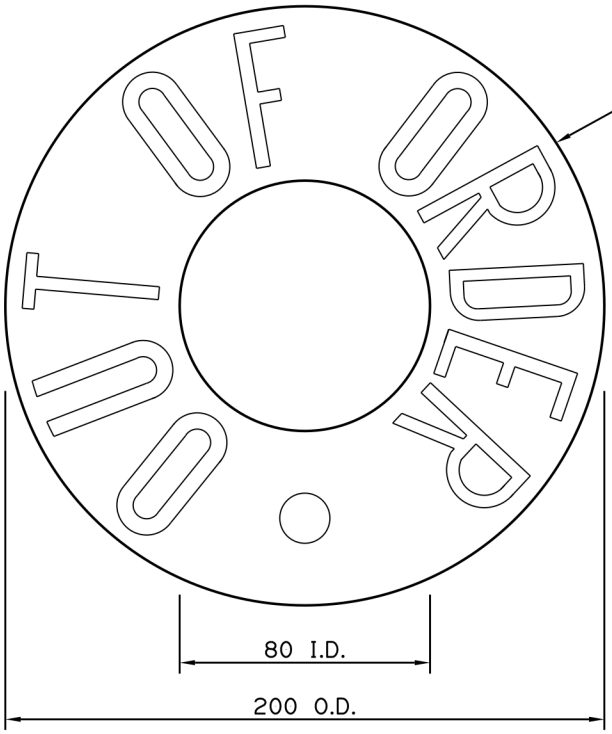

45mm WHITE LETTERS ON RED BACKGROUND (BOTH SIDES)

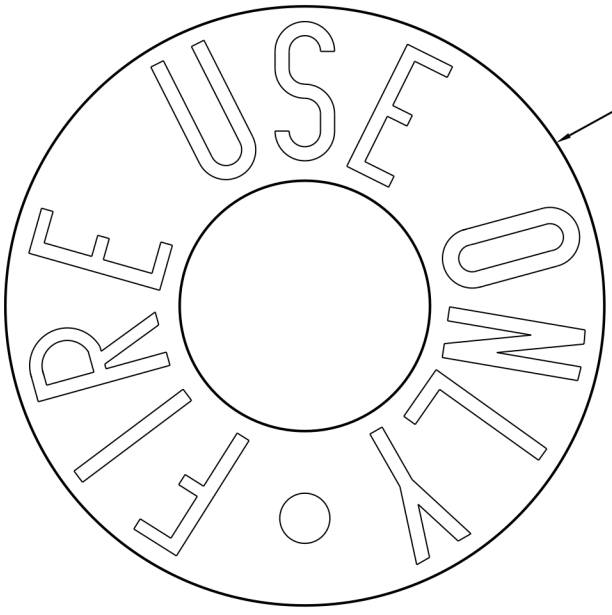

45mm RED LETTERS ON WHITE BACKGROUND (BOTH SIDES)

NOTE: 1. SIGNS TO BE INSTALLED ON HYDRANT DISCHARGE NOZZLES AS REQUIRED
2. SIGNS TO BE MADE OF 2mm STEEL PLATE.

DIMENSIONS ARE IN MILLIMETRES UNLESS OTHERWISE NOTED

No.	Date	Revision	App'd

Date 1987/12/04
Scale N.T.S.
Approved by
for The City of Calgary

THE CITY OF CALGARY WATERWORKS CONSTRUCTION

SPECIAL HYDRANT SIGNS

Sheet 3

File Number 453.1002.003

ISC: Unrestricted

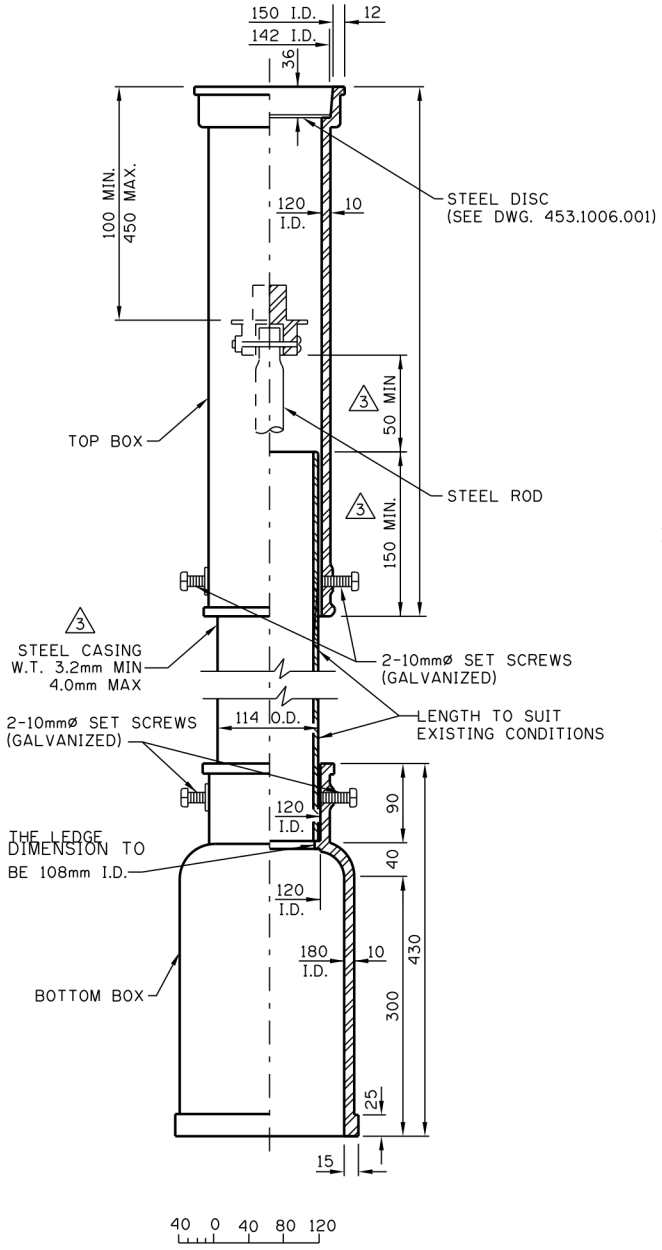

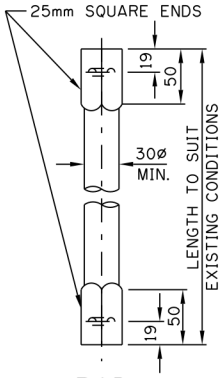

ROD

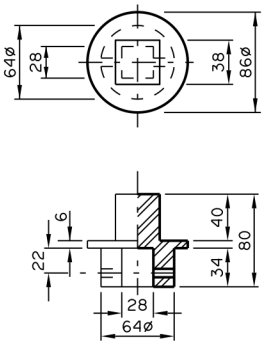

TOP NUT

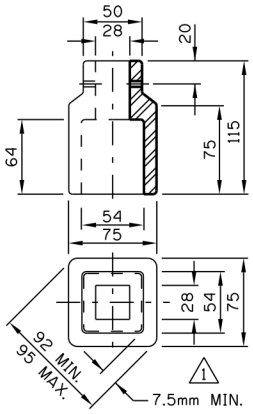

BOTTOM NUT

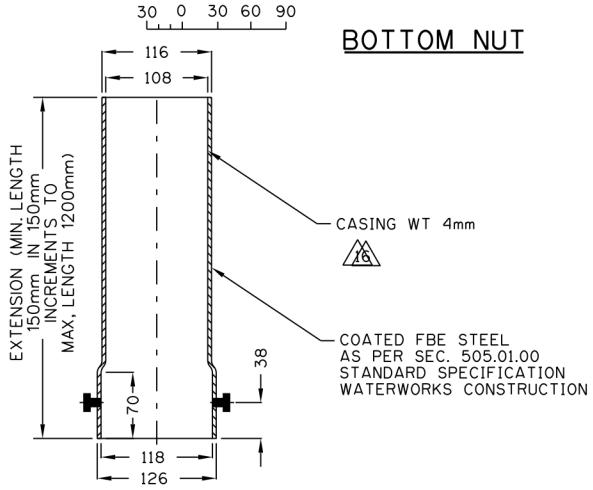

SECTION A-A

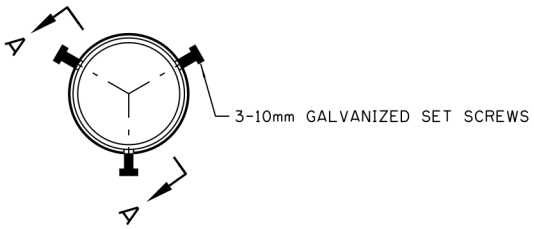

PLAN

NOTES:

1. ALL MATERIAL CAST IRON EXCEPT WHERE NOTED.
2. TOLERANCE ALLOWED ON TOP BOX & LID MEASUREMENTS.
   LID DIAMETER $^{+0}_{-3}$
   BOX DIAMETER $^{+3}_{-0}$
3. BOTTOM BOX DIMENSIONS FOR VALVES LARGER THAN 200mm SHALL CONFORM TO STD. DWG. 453.1006.009
4. THE EXTERIOR OF THE TOP BOX, STEEL CASING AND THE EXTERIOR AND INTERIOR OF THE BOTTOM BOX SHALL BE FACTORY COATED IN ACCORDANCE WITH SECTION 505.01.00 TYPE A OF THE STANDARD SPECIFICATIONS.
5. THE OPERATING ROD SHALL BE AN INTERGAL PART. JOINTS PRODUCED BY WELDING OR OTHER METHODS, ARE NOT ACCEPTABLE.
6. THE CASTING SHALL CONFORM TO SECTION 503.02.02.
7. GREY CAST IRON SHALL CONFORM TO ASTM A48, CLASS 25 (LATEST EDITION).

CASING EXTENSION

DIMENSIONS ARE IN MILLIMETRES
UNLESS OTHERWISE NOTED

No.	Date	Revision	App'd
3	07/12/20	ADDED DIMENSION, ADDED TOLERANCE	B.N.
2	06/01/16	MOVE LID DETAIL TO DRAWING 4a	B.N.
1	03/02/27	REVISED BOTTOM NUT DIMENSIONS & CASING WT	B.N.

Date: 1994/12/19
Scale: N.T.S.
Approved by: for The City of Calgary

THE CITY OF CALGARY — WATERWORKS CONSTRUCTION

TOP & BOTTOM BOX & CASING FOR 100mm, 150mm, & 200mm VALVES

Sheet: 4
File Number: 453.1006.006pt1

ISC: Unrestricted

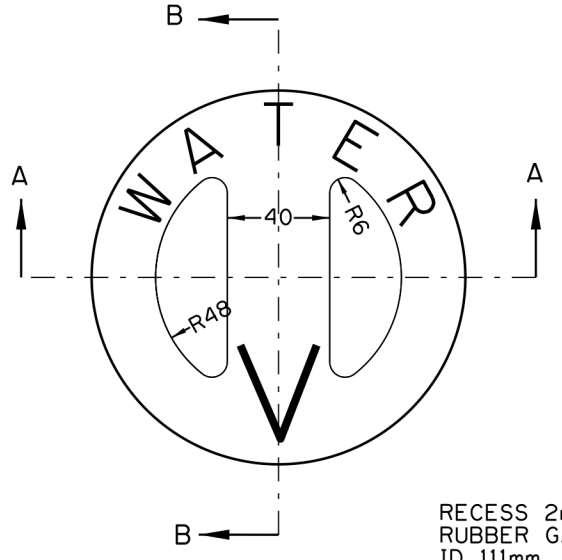

PLAN

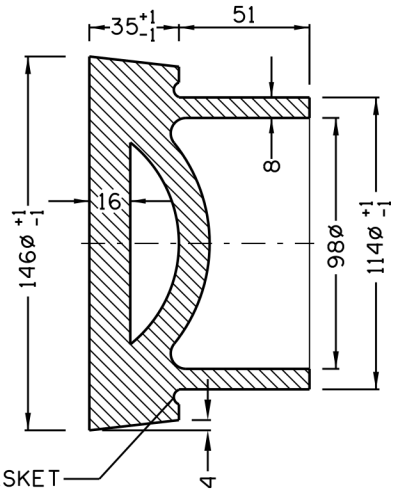

RECESS 2mm FOR RUBBER GASKET
RUBBER GASKET 60mm
ID 111mm

SECTION B-B

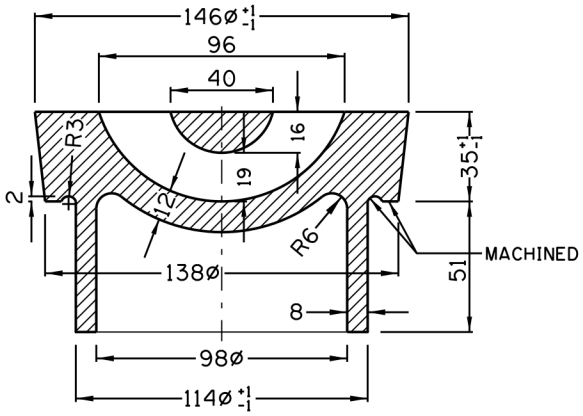

SECTION A-A

5. THE OPERATING ROD SHALL BE AN INTERGAL PART. JOINTS PRODUCED BY WELDING OR OTHER METHODS. ARE NOT ACCEPTABLE.

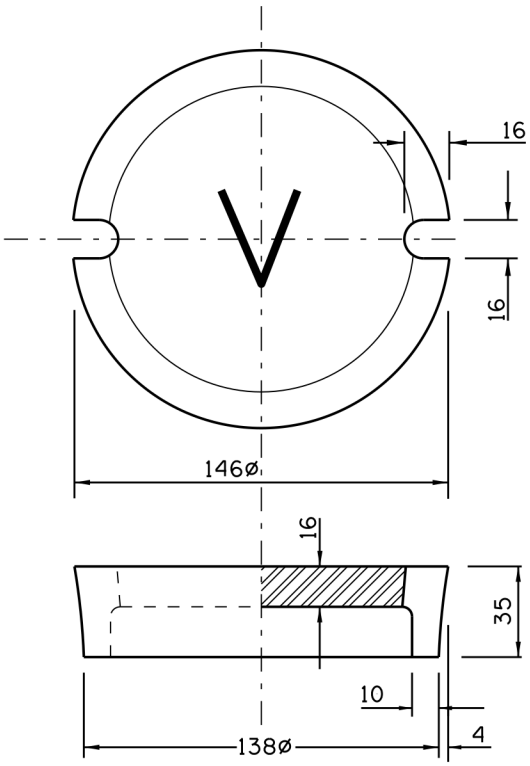

STANDARD LID

DEEP VALVE BOX LID

(FOR COLLECTOR ROAD
TRAFFIC VOLUMES & GREATER)

DIMENSIONS ARE IN MILLIMETRES
UNLESS OTHERWISE NOTED

No.	Date	Revision	App'd
1	2013/10/31	FIXED DIMENSIONING TEXT	

Date 2006/01/18
Scale N.T.S.
Approved by
for The City of Calgary

THE CITY OF CALGARY WATERWORKS CONSTRUCTION

STANDARD VALVE BOX LID & DEEP VALVE BOX LID

Sheet 4A

File Number 453.1006.006pt2

ISC: Unrestricted

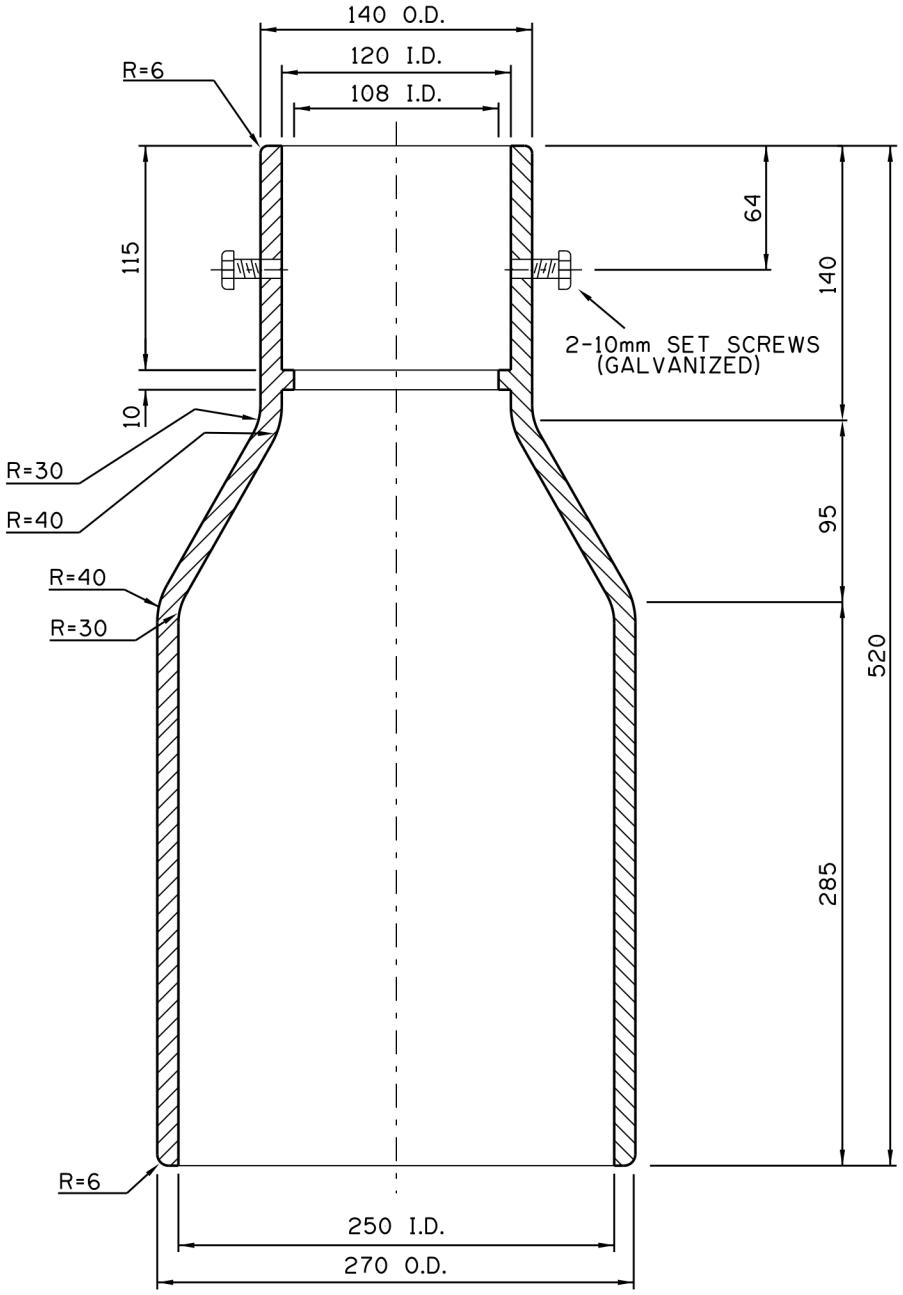

SECTION

NOTE:

1. TOP BOX, STEEL CASING AND ROD AS SHOWN ON DRAWING 453-1006-006pt1.
2. THE EXTERIOR AND INTERIOR OF THE BOTTOM BOX SHALL BE COATED IN ACCORDANCE WITH SECTION 505.01.00 (TYPE A) OF THESE SPECIFICATIONS.
3. THE CASTINGS SHALL CONFORM TO SECTION 503.02.02.
4. GREY CAST IRON SHALL CONFORM TO ASTM A48, CLASS 25 (LATEST EDITION).

DIMENSIONS ARE IN MILLIMETRES UNLESS OTHERWISE NOTED

No.	Date	Revision	App'd
1	2006/02/15	REVISED NOTE	B.N.

Date: 1980/02/01
Scale: N.T.S.
Approved by: for The City of Calgary

THE CITY OF CALGARY — WATERWORKS CONSTRUCTION

BOTTOM BOX FOR 250mm, 300mm, & 400mm VALVES

Sheet: 5

File Number: 453.1006.009

ISC: Unrestricted

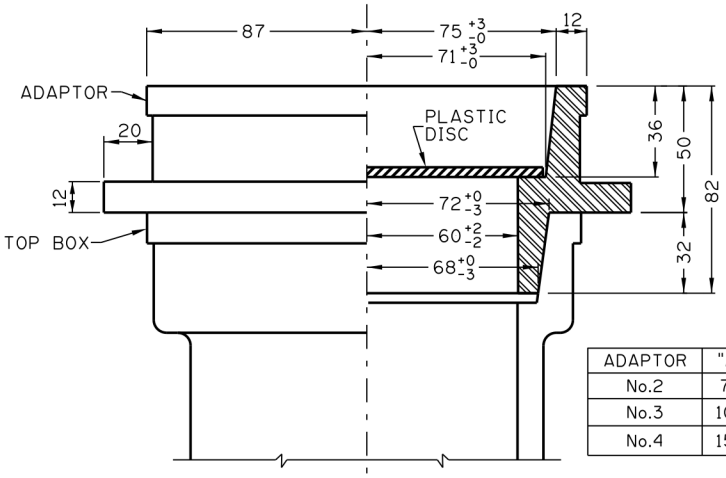

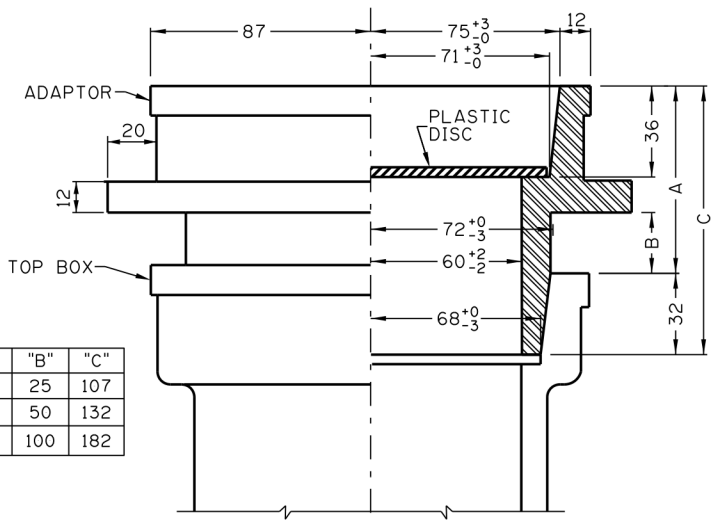

ADAPTOR	"A"	"B"	"C"
No.2	75	25	107
No.3	100	50	132
No.4	150	100	182

ADAPTOR NO. 1

ADAPTOR NO. 2, 3, 4 △5

NOTES:

1. THE NUMBER OF ADAPTORS SHALL NOT EXCEED ONE PER VALVE.
2. GREY CAST IRON SHALL CONFORM TO ASTM A48, CLASS 25 (LATEST EDITION). △2

PART No. 1

PLAN

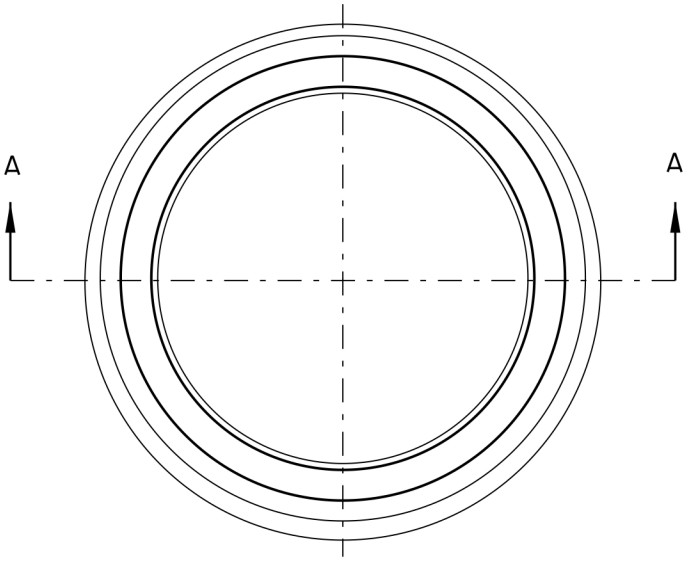

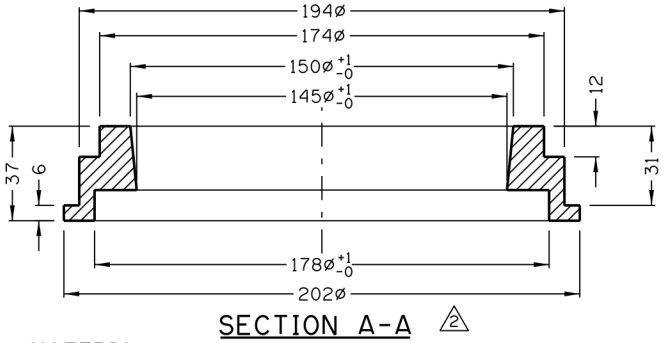

SECTION A-A △2

PART No. 2

PLAN

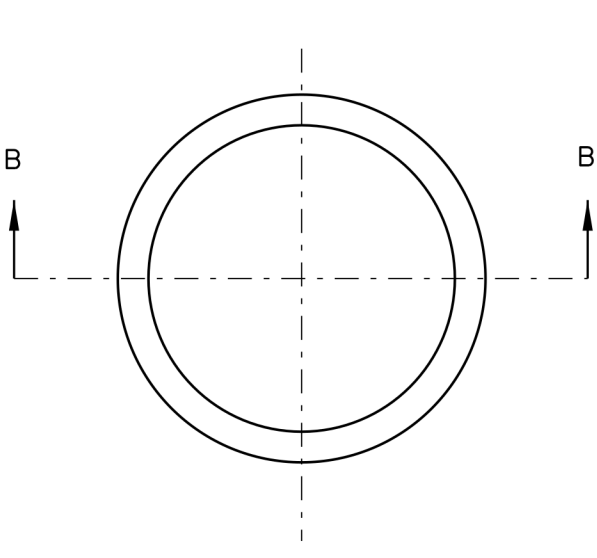

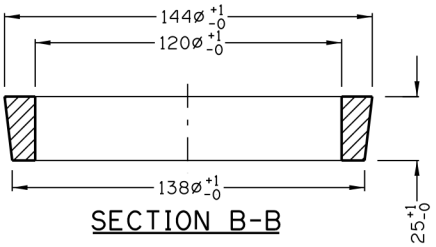

SECTION B-B

△2 △1

ADAPTOR No. 5
2 PIECE 25mm ADAPTOR

MATERIAL:

1. GREY CAST IRON TO CONFORM TO A.S.T.M. A48.CLASS 20 (LATEST EDITION)
2. GENERAL TOLERANCES - ±
3. NO DEVIATION SHALL BE ACCEPTABLE FOR DIMENSIONS WHICH ARE LESS THAN 10mm
4. MEASUREMENT IN MILLIMETERS

DIMENSIONS ARE IN MILLIMETRES UNLESS OTHERWISE NOTED

No.	Date	Revision	App'd
2	2010/01/18	FIXED DIMENSIONING TEXT	B.N.
1	2006/01/26	ADDITION OF ADAPTOR No. 5	B.N.

Date 2006/01/18

Scale N.T.S.

Approved by for The City of Calgary

THE CITY OF CALGARY — WATERWORKS CONSTRUCTION

VALVE BOX ADAPTORS FOR CROWN SURFACING

Sheet 6

File Number 453.1006.007

ISC: Unrestricted

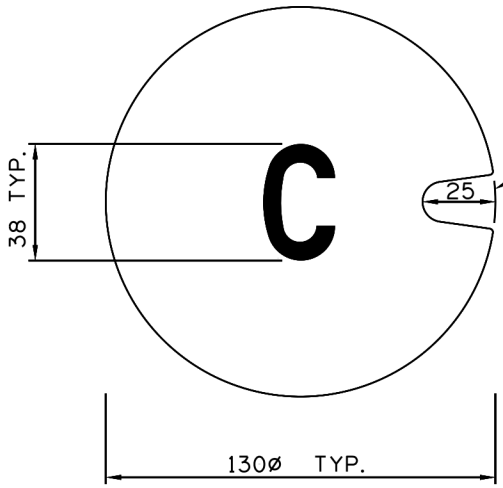

FINGER HOLE - 25mm X 20mm (TYP.)

INDICATES VALVE IS CLOSED. MUST BE REMOVED IF VALVE IS OPENED.

NOTE: DO NOT OPEN A CLOSED VALVE WITHOUT FIRST CONTACTING DISTRIBUTION CONTROL SECTION.

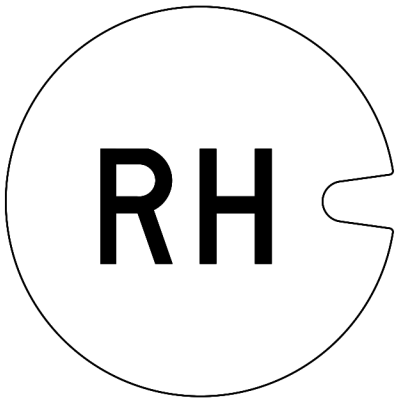

INDICATES VALVE TURNS RIGHT HAND TO OPEN (CLOCKWISE)

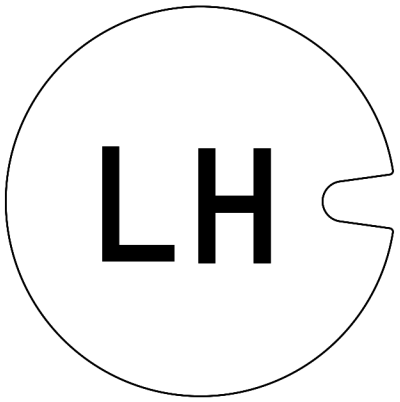

INDICATES VALVE TURNS LEFT HAND TO OPEN (COUNTER-CLOCKWISE)

NOTE:

1. DISCS TO BE MADE OF 3mm STEEL PLATE.
2. 38mm LETTERS TO BE FORMED WITH WELD.
3. DISCS TO BE PLACED IN VALVE TOP BOX UNDER LID.
4. SUPPLIED AND INSTALLED BY CITY OF CALGARY AS REQUIRED.

DIMENSIONS ARE IN MILLIMETRES UNLESS OTHERWISE NOTED

No.	Date	Revision	App'd

Date 1995/12/06
Scale N.T.S.
Approved by
for The City of Calgary

THE CITY OF CALGARY WATERWORKS CONSTRUCTION

VALVE CONTROL DISCS

Sheet 7

File Number 453.1006.001

ISC: Unrestricted

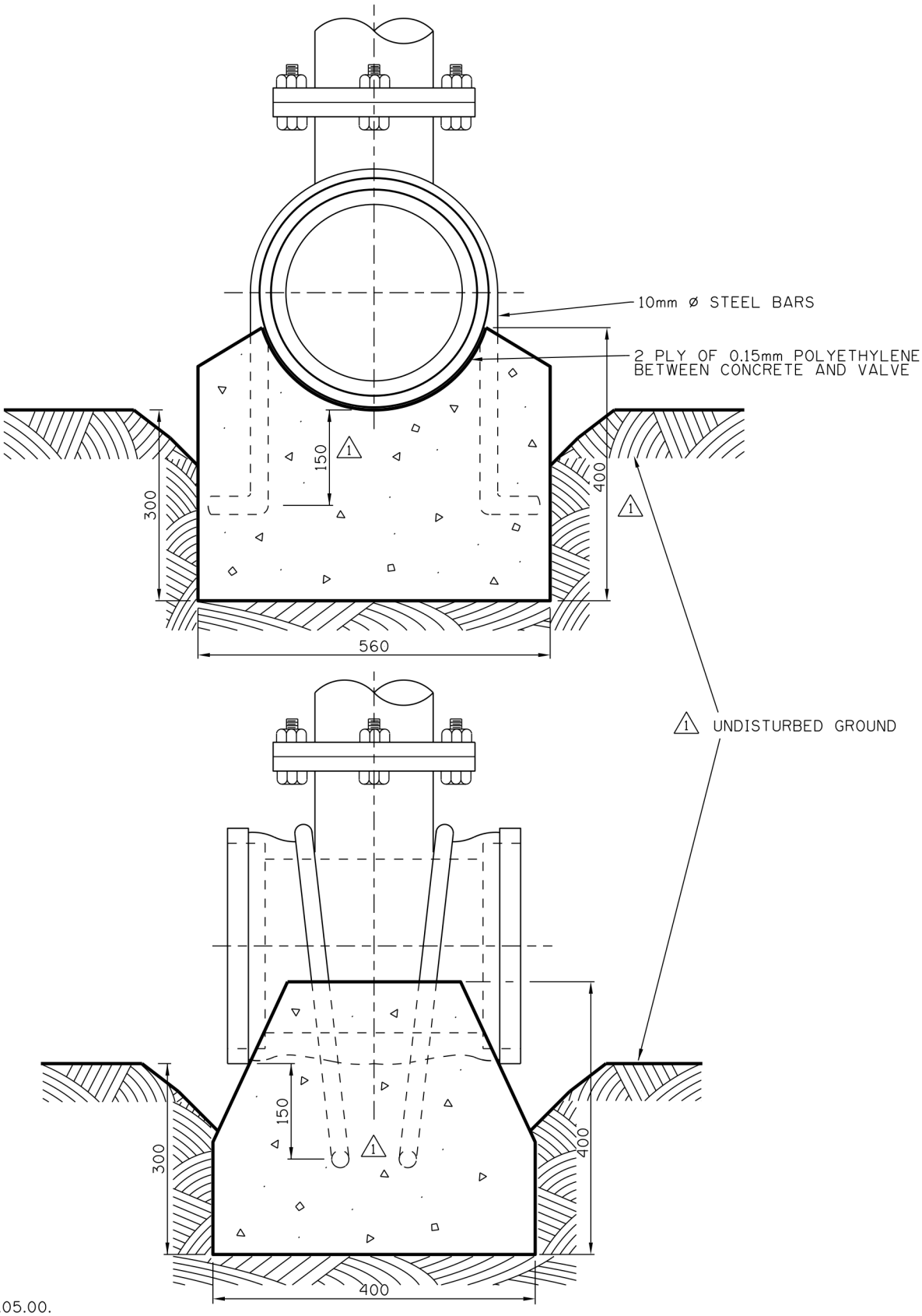

NOTE:

1. SEE SECTION 504.05.00.
2. ANCHOR RODS SHALL BE PLACED AS SHOWN OR THROUGH TIE BACK HOLES ON VALVES.
3. CONCRETE SHALL BE 20 MPa AT 28 DAYS, AND SULFATE RESISTANT.

DIMENSIONS ARE IN MILLIMETRES UNLESS OTHERWISE NOTED

No.	Date	Revision	App'd
1	2005/02/07	REVISED DRAWING	B.N.

Date: 1995/12/06
Scale: N.T.S.
Approved by: for The City of Calgary

THE CITY OF CALGARY — WATERWORKS CONSTRUCTION

VALVE ANCHORING DETAILS

Sheet: 8
File Number: 453.1006.008

ISC: Unrestricted

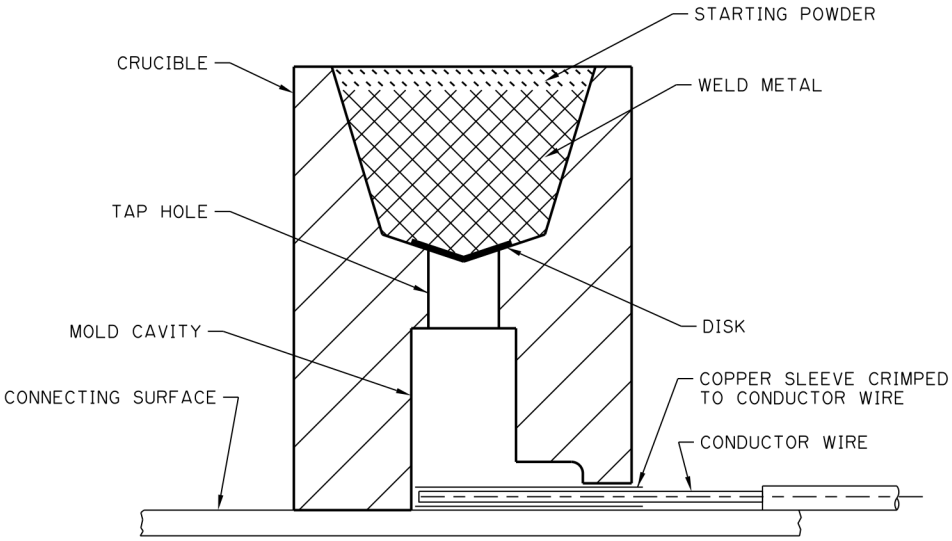

WELDING OF TERMINATED CONDUCTOR WIRE

(CROSS-SECTION -- SIDE VIEW)

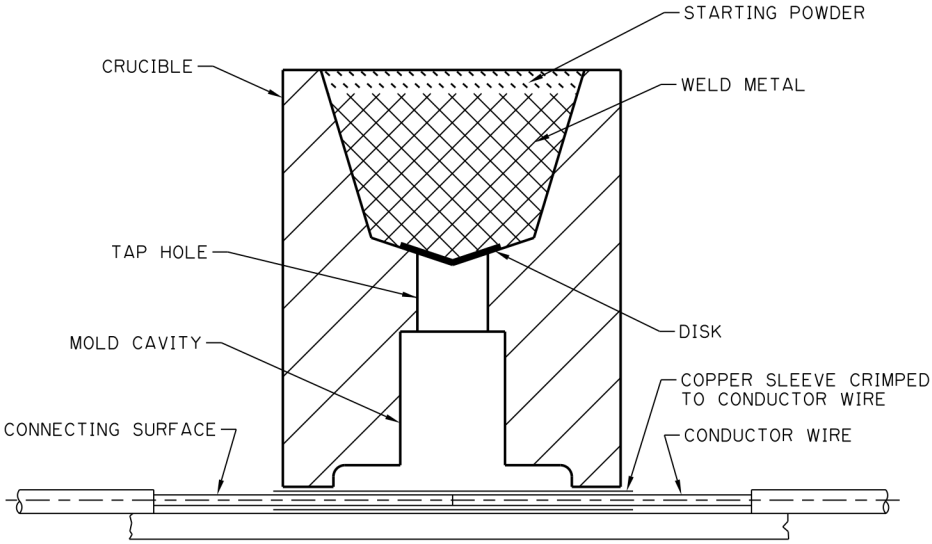

WELDING OF CONTINUOUS CONDUCTOR WIRE

(CROSS-SECTION -- SIDE VIEW)

NOTE: 1. THE CRUCIBLE AND WELD METAL SHALL BE AS MANUFACTURED BY ERICO PRODUCTS INC.-CADWELD OR THERMOWELD OR APPROVED EQUAL.

2. THE TYPE OF CRUCIBLE AND WELD METAL SHALL BE IN ACCORDANCE WITH THE MANUFACTURER'S SPECIFICATIONS.

DIMENSIONS ARE IN MILLIMETRES
UNLESS OTHERWISE NOTED

No.	Date	Revision	App'd
1	2003/03/19	REVISED TITLE	BN

Date: 1995/12/06
Scale: N.T.S.
Approved by
for The City of Calgary

THE CITY OF CALGARY WATERWORKS CONSTRUCTION

THERMITE WELD PROCESS

Sheet: 9

File Number: 453.1017.002

ISC: Unrestricted

No.	Date	Revision	App'd
2	2018/05/01	REVISED NOTE & ADDED NOTE	B.N.
1	2001/02/13	ADDED NOTE	E.P.

Date 1995/12/19
Scale N.T.S.
Approved by
for The City of Calgary

WATERWORKS CONSTRUCTION

ELECTRICAL CONDUCTIVITY STRIP FOR TYTON JOINTS METALLIC PIPE SYSTEM

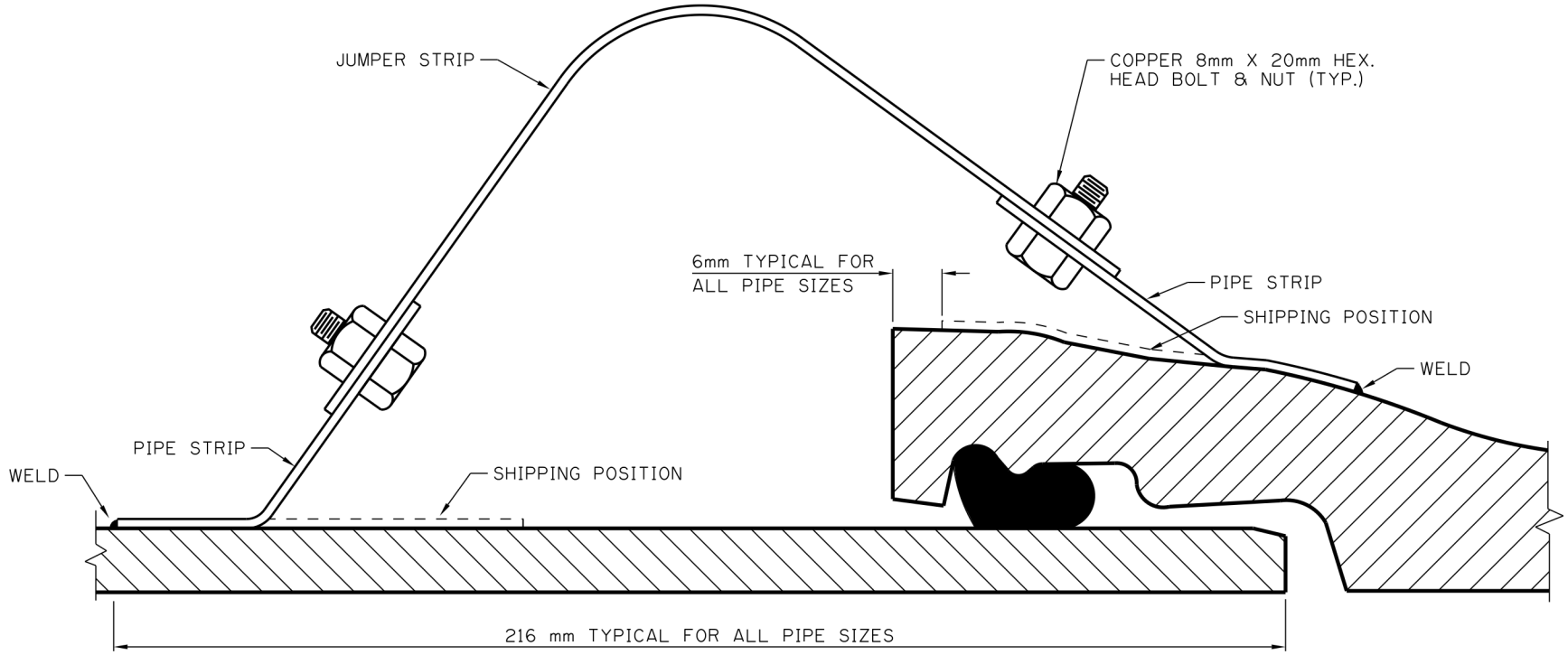

NOTE:

1. CONTINUITY BONDING MAY BE PROVIDED IN THE FIELD WITH A #10 BLUE "RWU" CABLE AS DETAILED ON STD. DWG. 453.1017.004
2. FLATTEN STRIP OR BONDING CABLE AGAINST PIPE AND APPLY FIELD COATING AS PER SECTION 505.03.00

DIMENSIONS ARE IN MILLIMETRES UNLESS OTHERWISE NOTED

Sheet 10

File Number 453.1008.003

ISC: Unrestricted

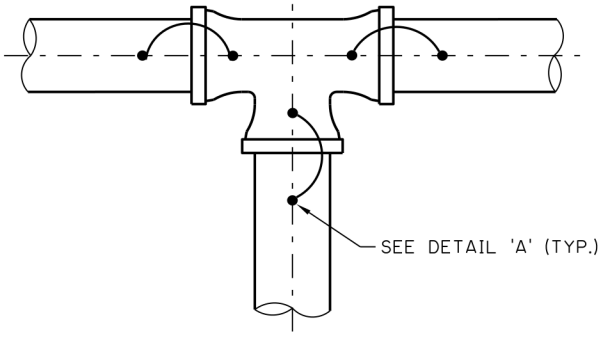

CONTINUITY BONDING
OF A TEE

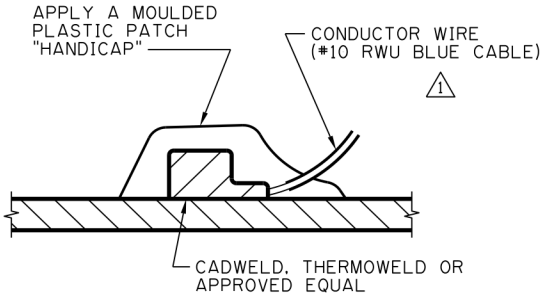

DETAIL 'A'

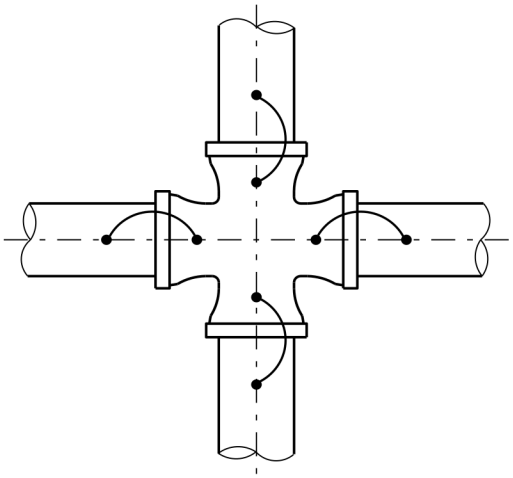

CONTINUITY BONDING
OF A CROSS

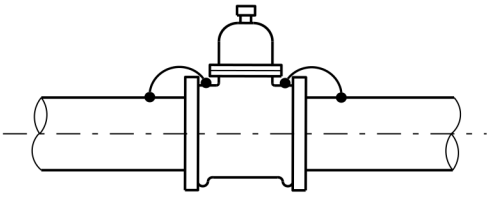

CONTINUITY BONDING
OF A VALVE

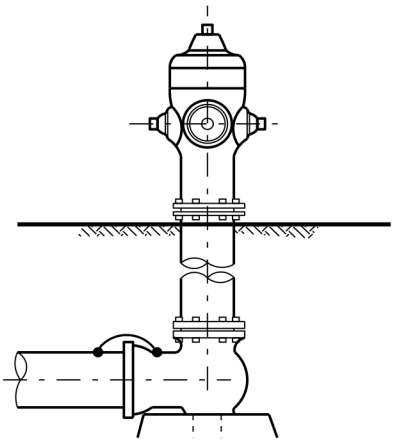

CONTINUITY BONDING
OF A HYDRANT

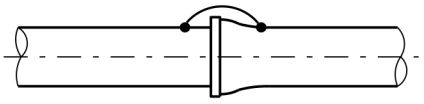

CONTINUITY BONDING OF A
SHORT PIPE SECTION

1 NOTE:

ALL BONDING WIRE TO BE #10 BLUE RWU

DIMENSIONS ARE IN MILLIMETRES
UNLESS OTHERWISE NOTED

No.	Date	Revision	App'd
1	2018/05/01	REVISED AND ADDED NOTES	B.N.

Date 1995/12/07
Scale N.T.S.
Approved by
for The City of Calgary

WATERWORKS CONSTRUCTION

ELECTRICAL CONDUCTIVITY
STRIPS METALLIC
DISTRIBUTION SYSTEM

Sheet 11

File Number 453.1017.004

ISC: Unrestricted

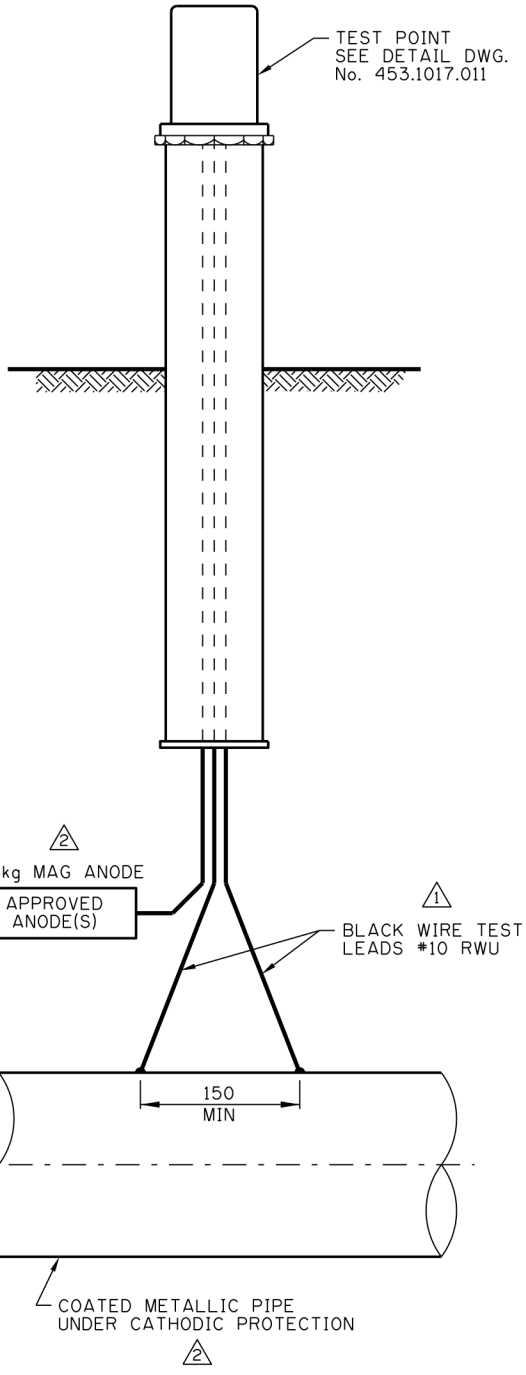

TYPICAL TEST POINT THROUGHOUT SYSTEM

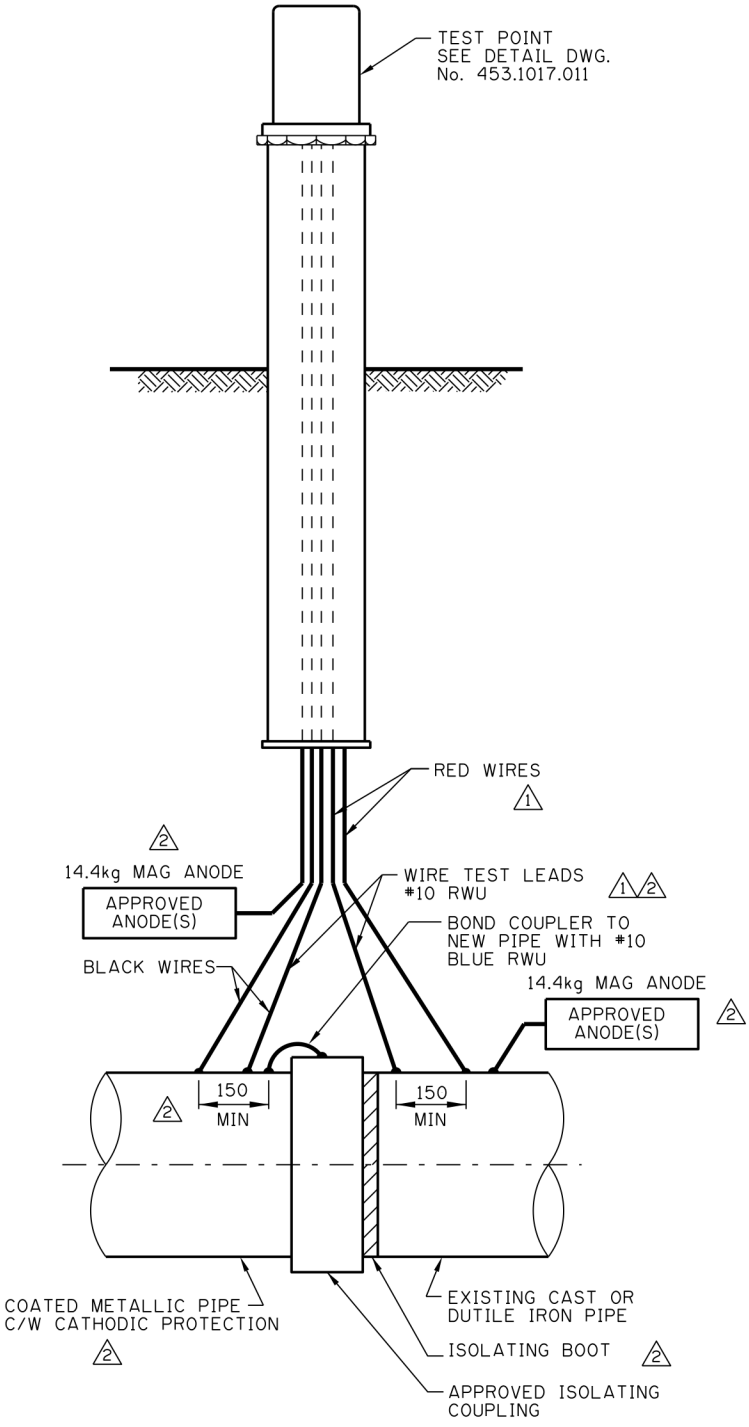

TYPICAL TEST POINT AT TIE TO UNPROTECTED SYSTEM

DIMENSIONS ARE IN MILLIMETRES
UNLESS OTHERWISE NOTED

No.	Date	Revision	App'd
2	2018/04/25	REVISED DETAILS AND NOTES	BN
1	2017/12/27	REVISED & ADDED NOTES	BN

Date: 1995/12/06
Scale: N.T.S.
Approved by: for The City of Calgary

WATERWORKS CONSTRUCTION

TYP. TEST POINT INSTALLATION FOR IMPRESSED CURRENT CATHODIC PROTECTION

Sheet: 12

File Number: 453.1017.003

ISC: Unrestricted

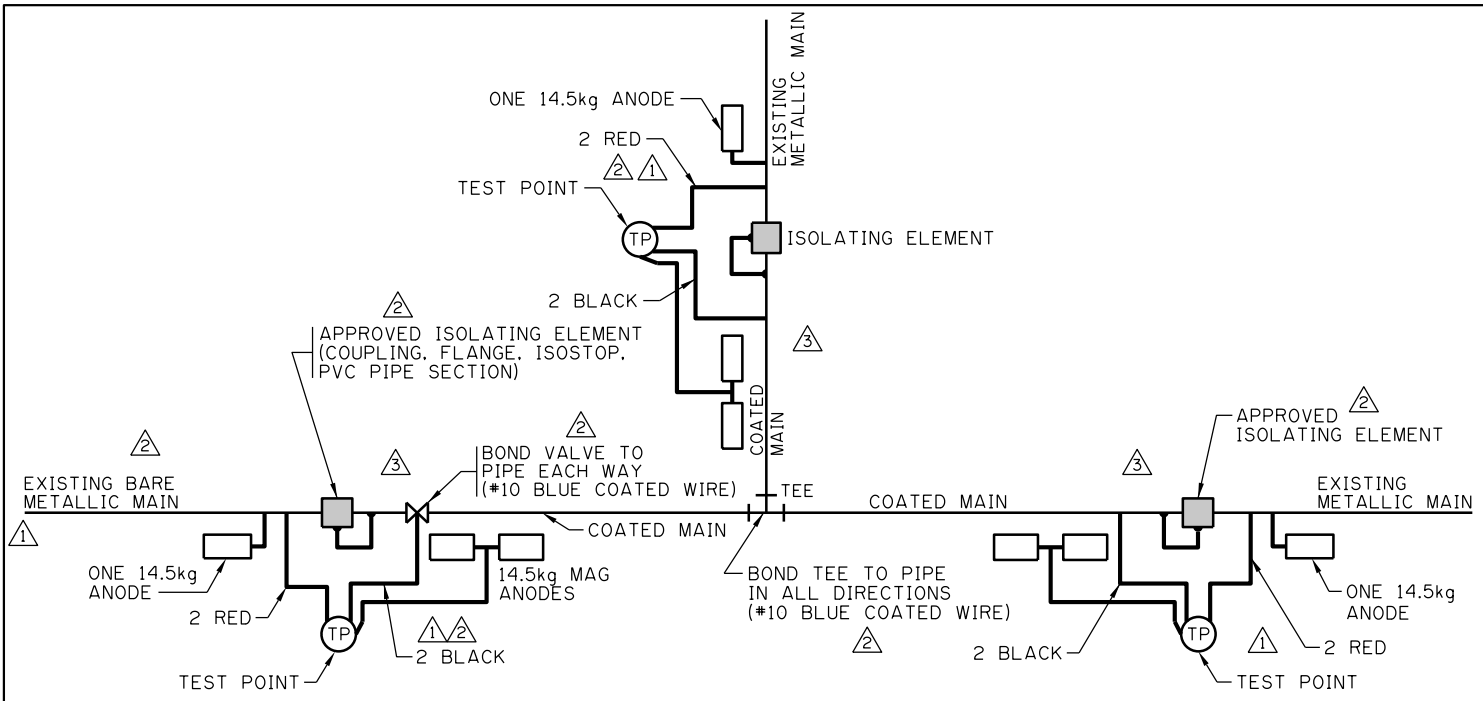

SCHEMATIC WIRE LAYOUT

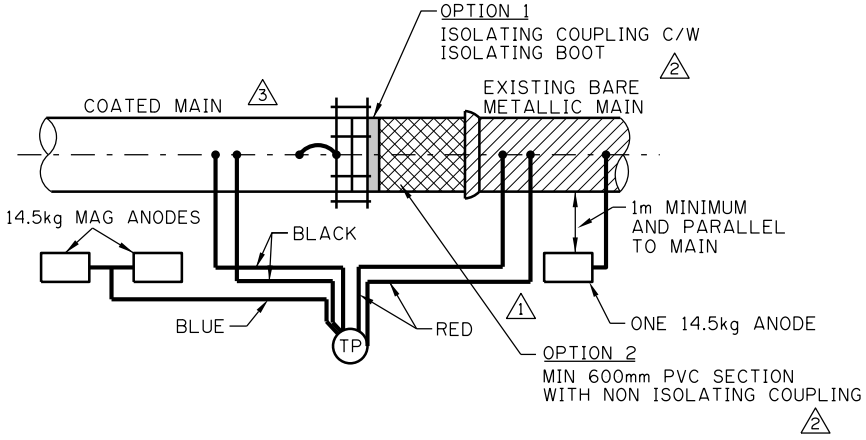

TYPICAL WIRE COLOUR DETAIL

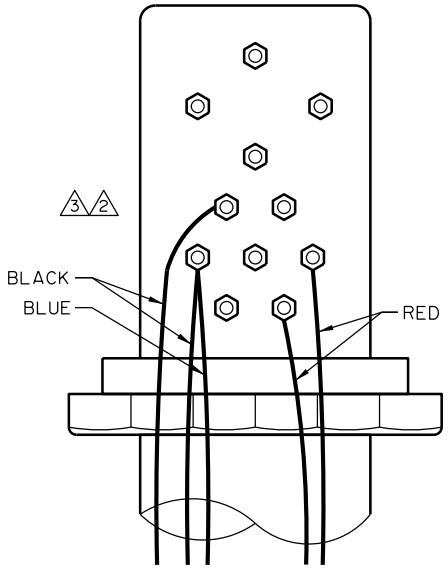

TEST POINT WIRING SCHEMATIC

WIRE SIZES & COLOURS:

#10 — RED —— EXISTING METALLIC MAIN
#10 — BLACK — COATED MAIN
#10 — BLUE —— ANODE
#10 — BLUE —— BONDING WIRE
ALL WIRE TO BE 7 STRANDS RWU INSULATION

NOTES:

1. BLUE LEAD WITH ANODE(S) ATTACHED. NUMBER AND TYPE OF ANODE AS APPROVED.
2. STRIP AT LEAST 50mm OF END COATING OFF.
3. ALL STRUCTURE WIRES (BLACK, RED, GREEN) TO BE TWO TWIN LEADS WELDED 150mm APART.

DIMENSIONS ARE IN MILLIMETRES UNLESS OTHERWISE NOTED

No.	Date	Revision	App'd
3	2022/03/30	REVISED DETAILS & REMOVED NOTE	D.N.
2	2018/05/02	REVISED NOTES & DETAILS	BN
1	2018/01/08	REVISED NOTES & DETAILS	BN

Date 1995/12/07
Scale N.T.S.
Approved by for The City of Calgary

WATERWORKS CONSTRUCTION

TYP. CATHODIC PROTECTION ON WATERMAIN REPLACEMENTS & EXTENSIONS

Sheet 13

File Number 453.1017.001

ISC: Unrestricted

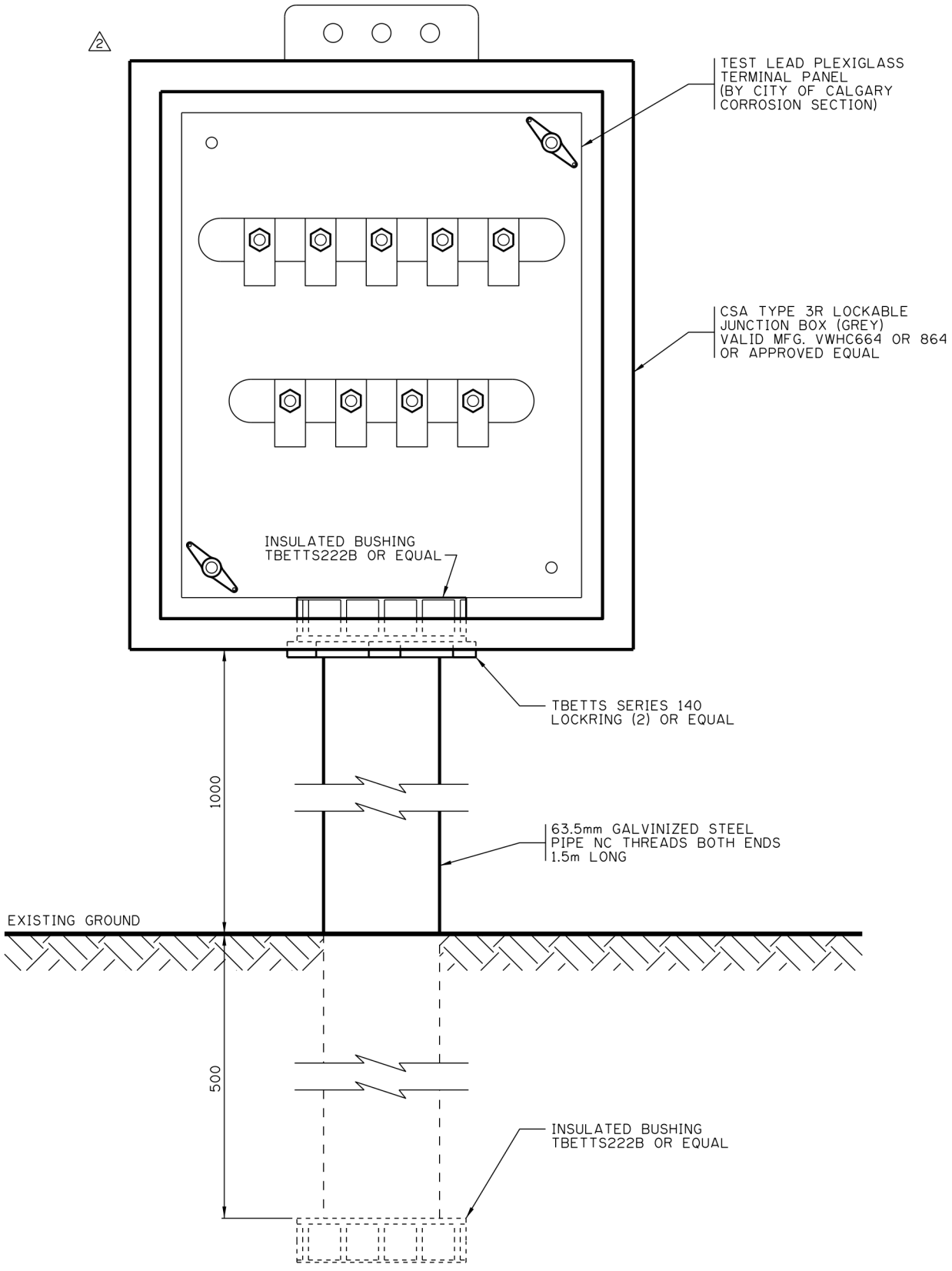

DIMENSIONS ARE IN MILLIMETRES UNLESS OTHERWISE NOTED

No.	Date	Revision	App'd
2	2018/05/02	CHANGED DETAIL & TITLE	BN
1	2017/12/27	REVISED NOTE	BN

Date: 1995/12/07
Scale: N.T.S.
Approved by: for The City of Calgary

WATERWORKS CONSTRUCTION

TEST POINT FOR 8 OR MORE TEST LEADS (ENCASEMENTS OR IMPRESSED CURRENT C.P. SYSTEMS) 2

Sheet: 14
File Number: 453.1017.005

ISC: Unrestricted

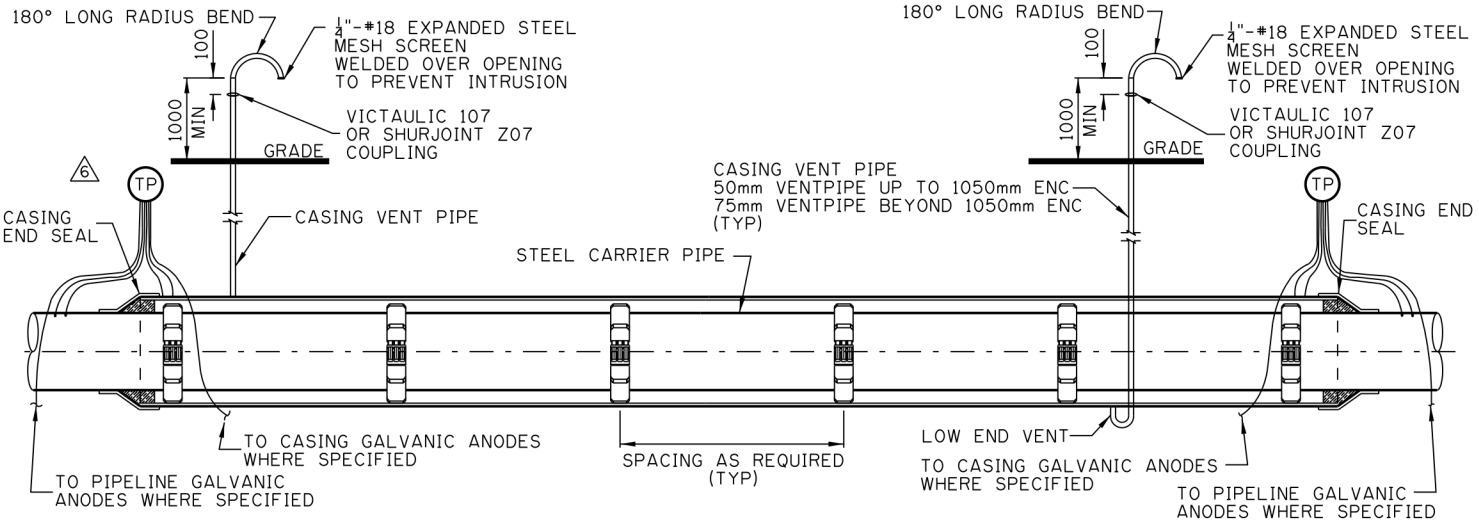

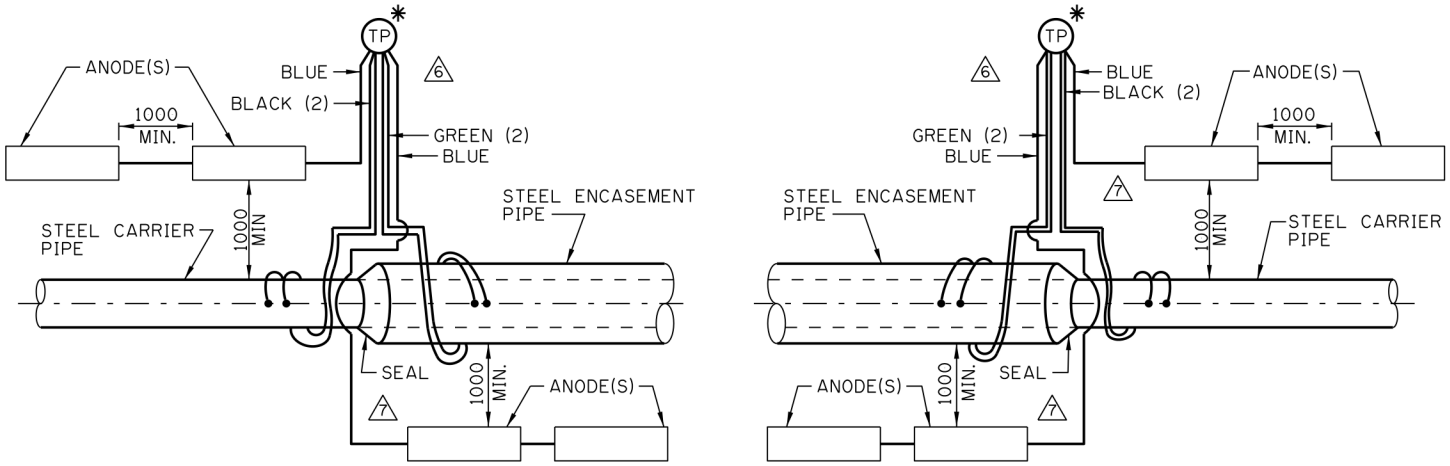

6 METALLIC CARRIER UNDER C.P. IN STEEL ENCASEMENT

	METALLIC ENCASEMENT PIPE NOMINAL ID (mm)	NUMBER OF 14.7kg MAG. ANODES * REQUIRED AT EACH END ON ENCASEMENT PIPE LESS THAN 30 METRES IN LENGTH	No. OF 14.7kg MAG. ANODES * REQUIRED AT EACH END ON ENCASEMENT PIPE GREATER THAN 30 METRES IN LENGTH
5	300 - 650	2	3
	660 - 1370	4	6
4	GREATER THAN 1370	6	9

NOTES:

* 1. WHERE ENCASEMENT PIPE IS LOCATED WITHIN 7 METRES OF HIGH VOLTAGE ELECTRICAL INFRASTRUCTURE, OR IS CROSSED BY SAME, SUBSTITUTE THREE 5.4kg ZINC ANODES FOR EACH 14.7kg MAG. ANODE AS SPECIFIED IN THE ABOVE TABLE. WHERE ZINC ANODES ARE USED, TEST LEADS SHALL BE WHITE. INSTALL A.C. MONITORING REFERENCE ELECTRODE AS PER SHEET 16 (7)

6 2. END SEALS SHALL BE APPROVED LINK SEALS AND VISCOTAQ END SEAL SYSTEM

3. WELD REDUNDANT STRUCTURE TEST LEADS (2 LEADS 150mm APART) ON BOTH CARRIER & ENCASEMENT (TOTAL 4) WHERE STEEL IN STEEL

4. WHERE D.C. TRACTION SYSTEM WITHIN 50m, INSTALL D.C. COUPON C/W REFERENCE TUBE AS PER SHEET 16A (CSCL CPMP 210)

5. WHERE A.C. CURRENT SOURCE ABOVE 25KVH WITHIN 50m INSTALL A.C. ELECTRODE (STELTH 7AC-200 OR CSCL-ACC-1-2)

6. WHERE TEST STATION IN PAVEMENT, CONCRETE OR CONTACT WITH REMOTE EARTH UNAVAILABLE, INSTALL CuSo4 REFERENCE ANODE (STELTH 2 OR EDL-UL)

WIRE SIZES & COLORS:

#10 BLACK
#10 GREEN
#10 BLUE
#10 WHITE (WHERE ZINC ANODES INSTALLED)

ALL WIRE TO BE 7 STRAND RWU INSULATION

DIMENSIONS ARE IN MILLIMETRES UNLESS OTHERWISE NOTED

No.	Date	Revision	App'd
7	2019/09/06	RELOCATED WIRING & ANODES	B.N.
6	2018/08/22	REVISED NOTES, TITLE & ADDED NEW DETAIL	B.N.
5	0000/00/00	REVISED ENCASEMENT PIPE SIZE	B.N.
4	2009/12/10	ADDED ENCASEMENT PIPE SIZE	B.N.
3	2009/04/24	REVISED DRAWING	B.N.
2	2008/12/03	REVISED DETAIL & TITLE	B.N.

Date 2008/10/30
Scale N.T.S.
Approved by
for The City of Calgary

WATERWORKS CONSTRUCTION

CATHODIC PROTECTION (C.P.) FOR METALLIC CARRIER IN SEALED STEEL ENCASEMENT (6)

Sheet 15

File Number 453.1017.006

ISC: Unrestricted

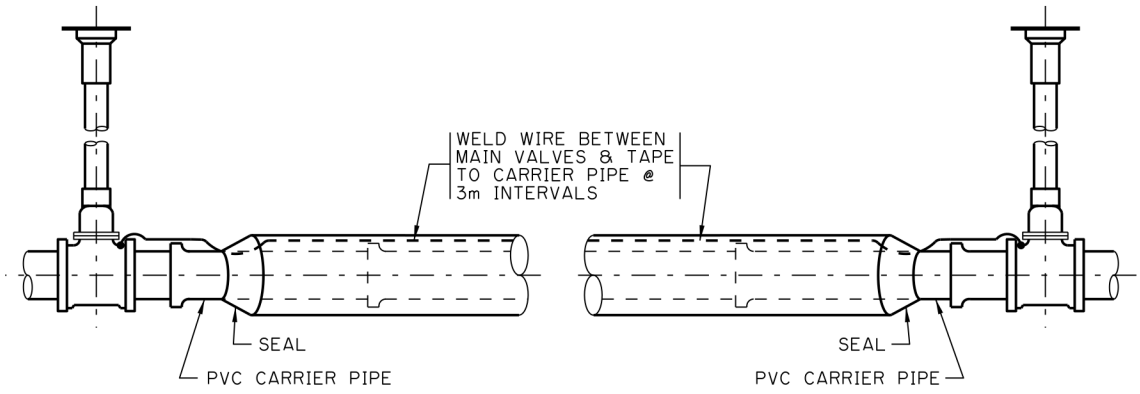

TRACING WIRE FOR NON-METALLIC CARRIER IN PVC ENCASEMENT

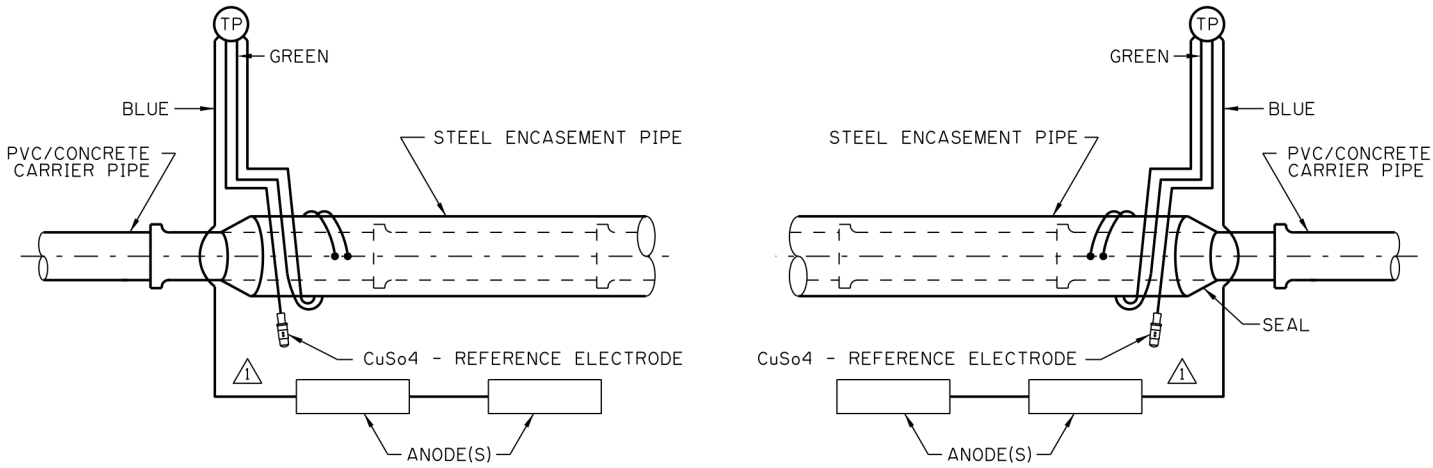

CATHODIC PROTECTION FOR NON-METALLIC CARRIER

METALLIC ENCASEMENT PIPE NOMINAL ID (mm)	NUMBER OF 14.7kg MAG. ANODES * REQUIRED AT EACH END ON ENCASEMENT PIPE LESS THAN 30 METRES IN LENGTH	No. OF 14.7kg MAG. ANODES * REQUIRED AT EACH END ON ENCASEMENT PIPE GREATER THAN 30 METRES IN LENGTH
300 - 650	2	3
660 - 1370	4	6
GREATER THAN 1370	6	9

NOTES:

1. FOR STEEL ENCASEMENT PIPE, INSTALL A "STELTH 2" CuSo4 REFERENCE ELECTRODE OR APPROVED EQUAL INTO A TEST STATION AS DIRECTED BY THE ENGINEER.
2. WHERE CARRIER PIPE IS NON-METALLIC, ENCASEMENT END SEAL SHALL BE FILTER FABRIC AS PER SHEET 16 AND SEC. 504.02.02.
3. * WHERE STEEL ENCASEMENT IS WITHIN 7 METERS OF 25KV OR GREATER ELECTRICAL INFRASTRUCTURE OR IS CROSSED BY SAME. SUBSTITUTE EQUIVALENT WEIGHT OF ZINC ANODES FOR THE MAGNESIUM ANODE WEIGHT SPECIFIED IN THE ABOVE TABLE. ANODE WEIGHT AND PLACEMENT MAY BE REDUCED OR ADJUSTED AT TIME OF INSTALLATION BY THE ENGINEERS REPRESENTATIVE IN THE FIELD.
4. * WHERE DC TRACTION SYSTEM IS WITHIN 50m, REINFORCED CONCRETE PIPE IS TO BE MADE ELECTRICALLY CONTINUOUS C/W TEST LEADS AS PER SHEET 16.
5. INSTALLATION OF AC MONITORING REFERENCE ELECTRODE(S) OR DC MONITORING COUPON(S) AS PER SHEET 16A MAY BE REQUIRED AT THE DISCRETION OF THE ENGINEER.

WIRE SIZES & COLORS:

#10 BLACK #10 BLUE
#10 GREEN #10 WHITE (WHERE ZINC ANODES INSTALLED)
ALL WIRE TO BE 7 STRAND RWU INSULATION

DIMENSIONS ARE IN MILLIMETRES UNLESS OTHERWISE NOTED

No.	Date	Revision	App'd
1	2019/09/06	RELOCATED WIRING & REVISED NOTES AND DETAILS	B.N.

Date 2018/05/03
Scale N.T.S.
Approved by for The City of Calgary

WATERWORKS CONSTRUCTION

CATHODIC PROTECTION FOR NON-METALLIC CARRIERS AND STEEL ENCASEMENT PIPE

Sheet 15A
File Number 453.2002.001

ISC: Unrestricted

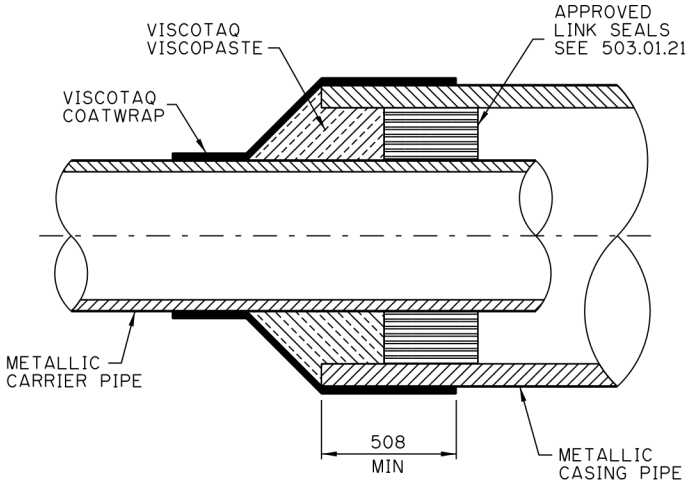

2 END SEALED ENCASEMENT DETAIL FOR METALLIC CARRIER PIPE

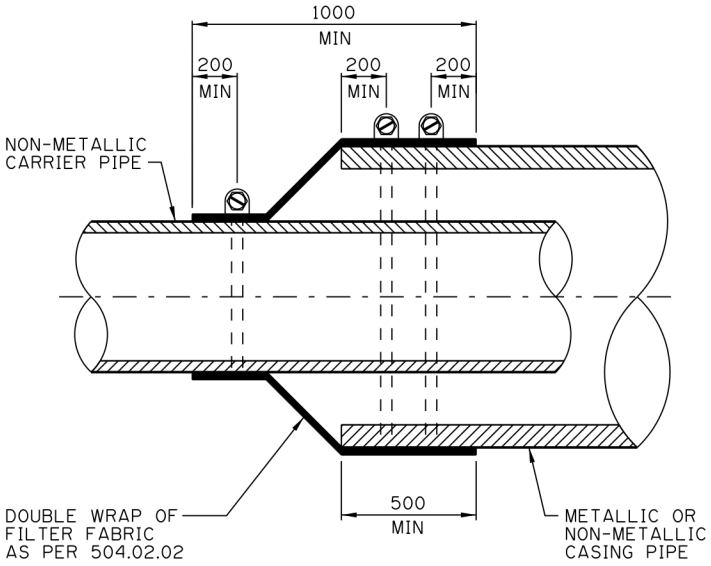

2 UNSEALED ENCASEMENT DETAIL FOR NON-METALLIC CARRIER PIPE

NOTE:

1. SECURE FILTER FABRIC WITH STAINLESS STEEL 13mm BAND/HOSE CLAMPS.

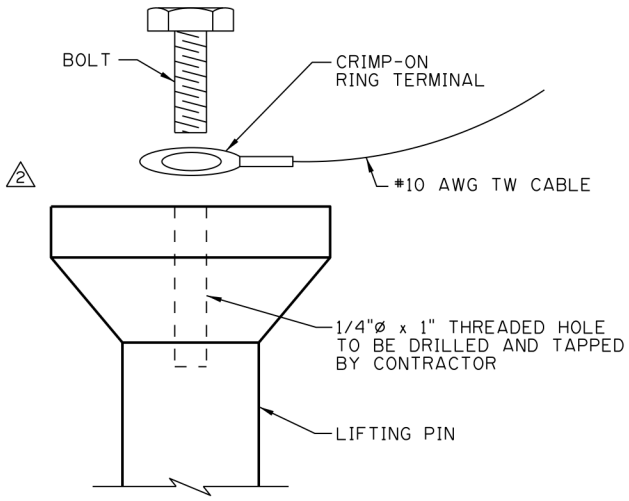

NOTES:

1. MECHANICAL CABLE CONNECTIONS TO BE COATED UTILIZING DENSO PROFILING MASTIC AND DENSO PETROLATUM TAPE
2. APPLY KOPR-KOTE TO BOLT AND RING TERMINAL FOR INCREASED ELECTRICAL CONTACT AND CORROSION RESISTANCE
3. CONTINUITY BONDING TO BE INSTALLED AND TESTED AFTER COMPLETION OF PIPE INSTALLATION

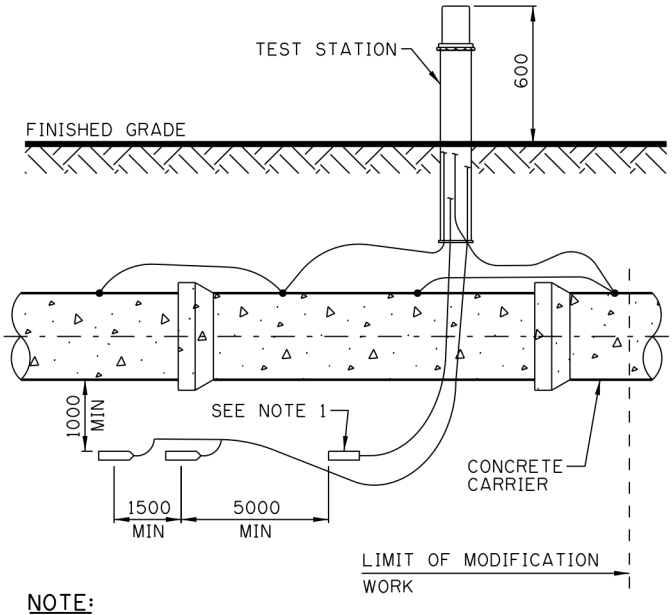

NOTE:

1. USE "STELTH 2 CuSo4" ELECTRODE c/w 15m (50ft) #14 AWG MWPE (OR APPROVED EQUIVALENT) ELECTRODE MUST BE INSTALLED A MIN OF 200mm AWAY FROM ENCASEMENT AND A MAX DISTANCE OF 800mm
2. INSTALL ZINC ANODE WEIGHT AS APPROVED, AND A.C. MONITORING ELECTRODE AND/OR D.C. COUPON AS REQUIRED

2 RCP - LIFT PIN CONTINUITY BONDING FOR RE-BAR CAGE CONTINUOUS TO LIFT PIN INSTALLATION

DIMENSIONS ARE IN MILLIMETRES UNLESS OTHERWISE NOTED

No.	Date	Revision	App'd
2	2018/05/07	CHANGED DETAIL	BN
1	2017/12/27	REVISED NOTES	BN

Date: 1995/12/07
Scale: N.T.S.
Approved by: for The City of Calgary

WATERWORKS CONSTRUCTION

CARRIER & ENCASEMENT PIPE-INSTALLATION SPECIFIC DETAILS (PT. 1) 2

Sheet: 16
File Number: 453.1017.007

ISC: Unrestricted

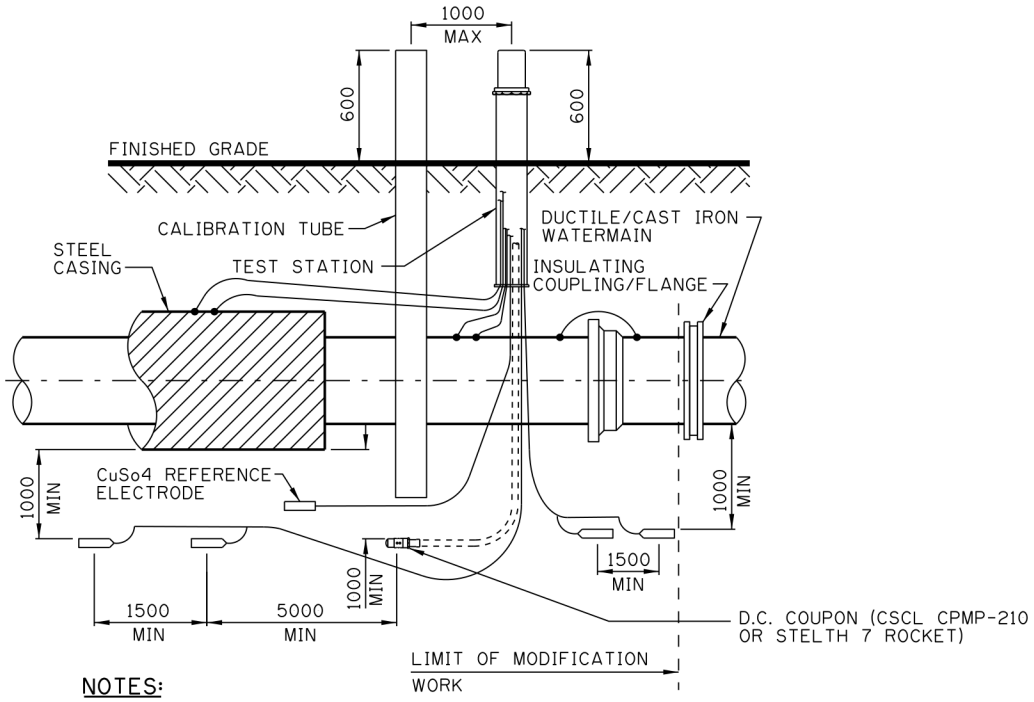

NOTES:

1. INSTALL A "STELTH 2" CuSo4 REFERENCE ELECTRODE OR APPROVED EQUAL IN EACH TEST STATION AT BOTH ENDS OF STEEL ENCASEMENT PIPE.
2. WHERE REQUIRED, INSTALL D.C. MONITORING COUPON "CSCL MODEL CPMP-2-10" C/W CALIBRATION TUBE, OR APPROVED EQUAL IN ADDITION TO CuSo4 REFERENCE ELECTRODE.
3. CALIBRATION TUBE IS 75mm DIAMETER WHITE HIGH DENSITY U.V. RESISTANT POLYETHYLENE POST LENGTH AS REQUIRED.

2 DC COUPON C/W REFERENCE TUBE

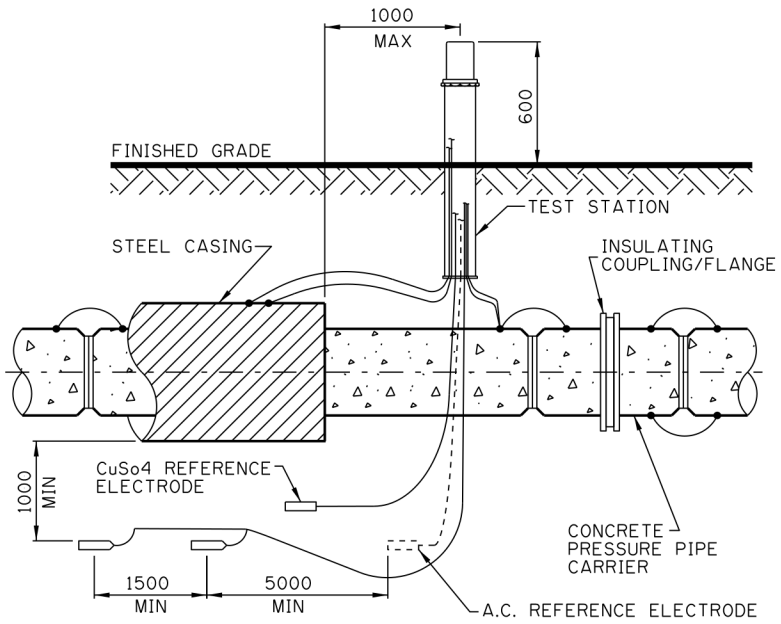

NOTES:

1. INSTALL A "STELTH 2" CuSo4 REFERENCE ELECTRODE OR APPROVED EQUAL IN EACH TEST STATION AT BOTH ENDS OF STEEL ENCASEMENT PIPE.
2. WHERE REQUIRED, INSTALL "STELTH 7ACC-1-2" AC MONITORING ELECTRODE C/W 15m (50ft) #14 AWG MWPE LEAD OR APPROVED EQUAL IN ADDITION TO CuSo4 REFERENCE ELECTRODE. AC MONITORING ELECTRODE TO BE INSTALLED A MINIMUM OF 200mm, MAXIMUM OF 800mm FROM ENCASEMENT PIPE.

2 TYPICAL A.C. MONITORING ELECTRODE INSTALLATION

DIMENSIONS ARE IN MILLIMETRES
UNLESS OTHERWISE NOTED

No.	Date	Revision	App'd

Date: 2018/05/07
Scale: N.T.S.
Approved by: for The City of Calgary

WATERWORKS CONSTRUCTION

CARRIER & ENCASEMENT PIPE-INSTALLATION SPECIFIC DETAILS (PT.2) 2

Sheet: 16A
File Number: 453.2003.001

ISC: Unrestricted

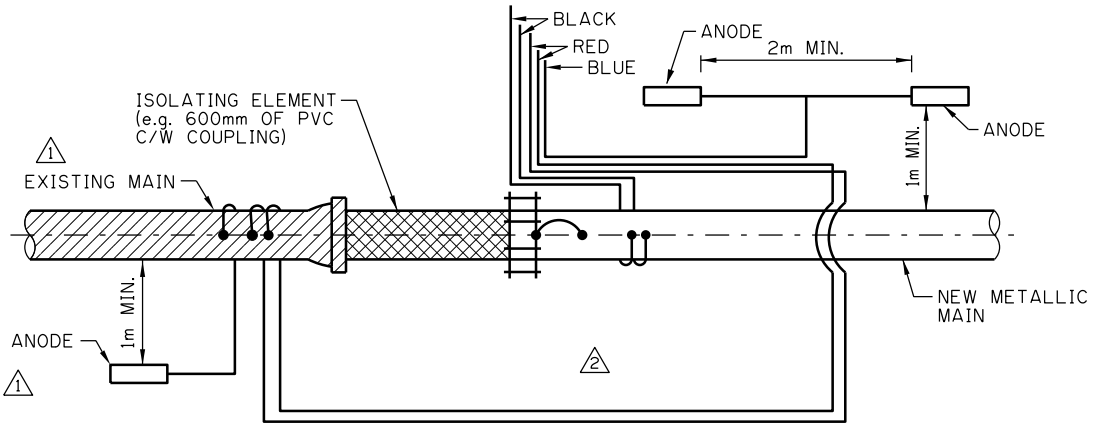

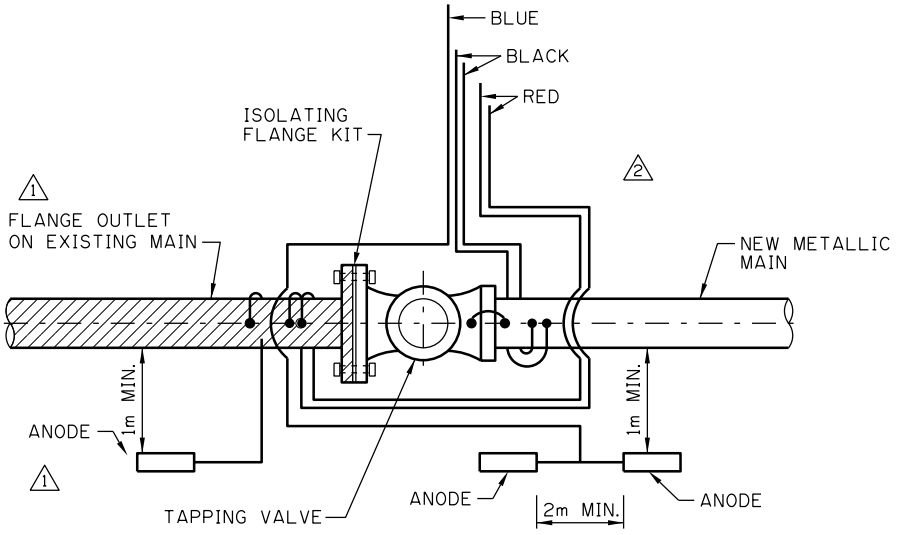

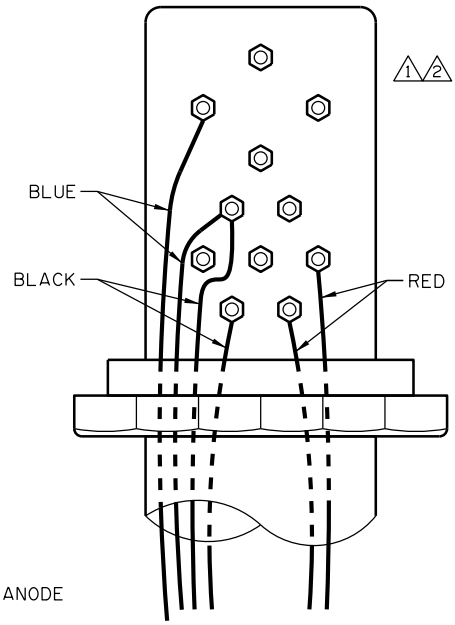

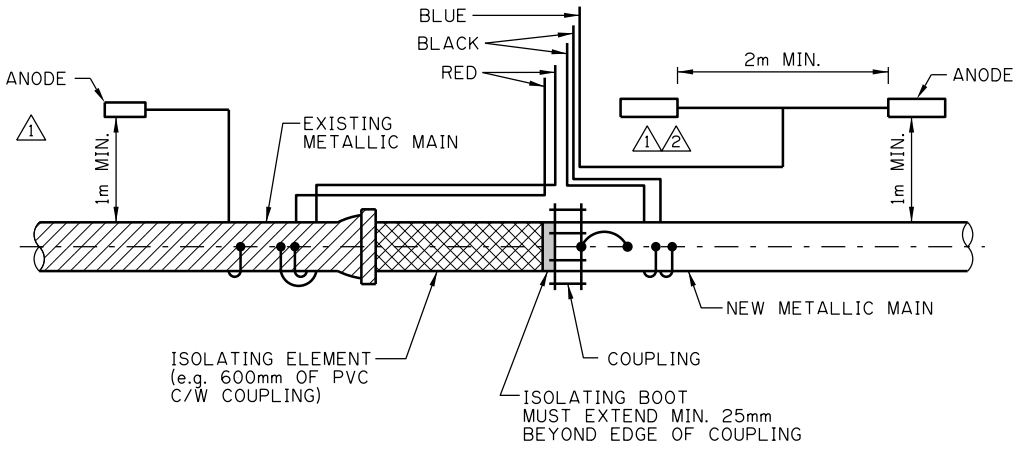

WIRE SIZES & COLOURS:

2 #10 BLACK
#10 RED
#10 BLUE
1 #10 BLUE-BONDING

NOTES:

1. ANODES 14.4kg MAGNESIUM UNLESS OTHERWISE APPROVED (1)
2. ALL WIRES TO BE 7 STRANDS RWU INSULATION (2)

TYPICAL WIRING SCHEMATIC FOR A TEST POINT AND ANODE INSTALLATION AT AN ISOLATION ELEMENT

TEST POINT WIRING SCHEMATIC

DIMENSIONS ARE IN METRES
UNLESS OTHERWISE NOTED

No.	Date	Revision	App'd
2	2022/03/30	REVISED DETAILS. REVISED & ADDED NOTES	DN
1	2018/05/04	REVISED DETAILS. NOTES & ADDED NOTES	BN

Date 1995/12/07
Scale N.T.S.
Approved by
for The City of Calgary

WATERWORKS CONSTRUCTION

TYPICAL TEST POINT
AT ISOLATING ELEMENT
METALLIC PIPE SYSTEM

Sheet 17

File Number 453.1017.008

ISC: Unrestricted

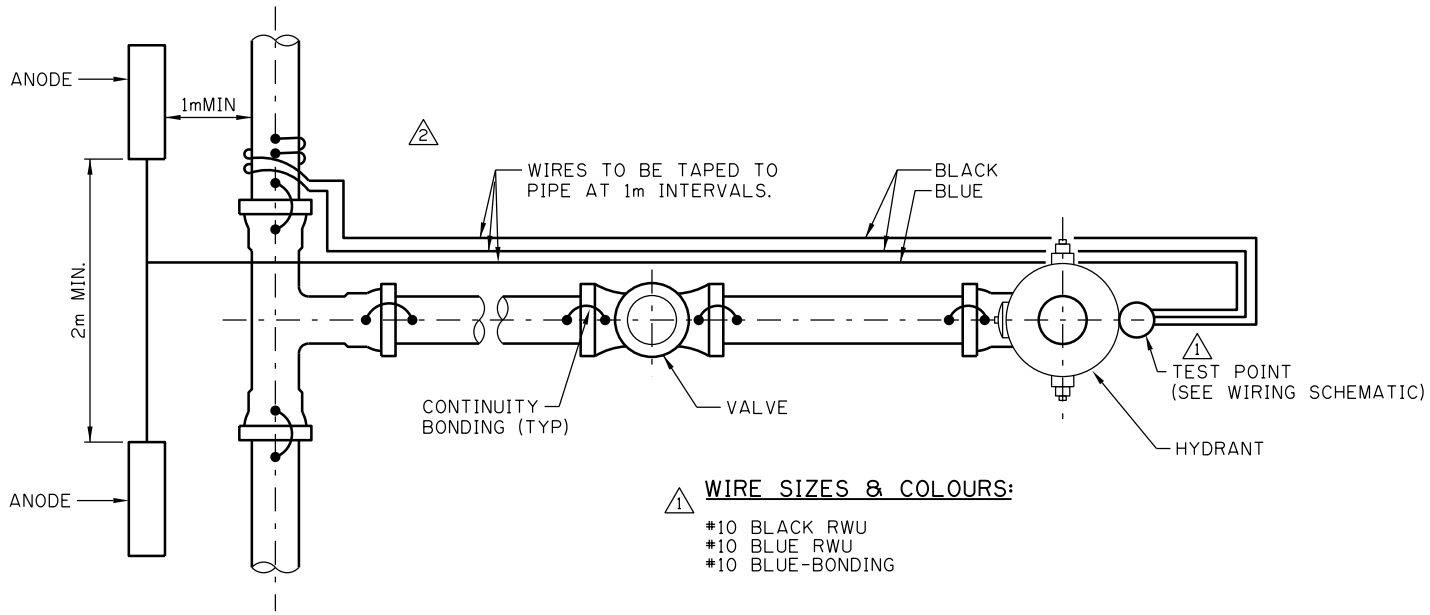

TYPICAL WIRING SCHEMATIC & ANODE INSTALLATION FOR A TEST POINT

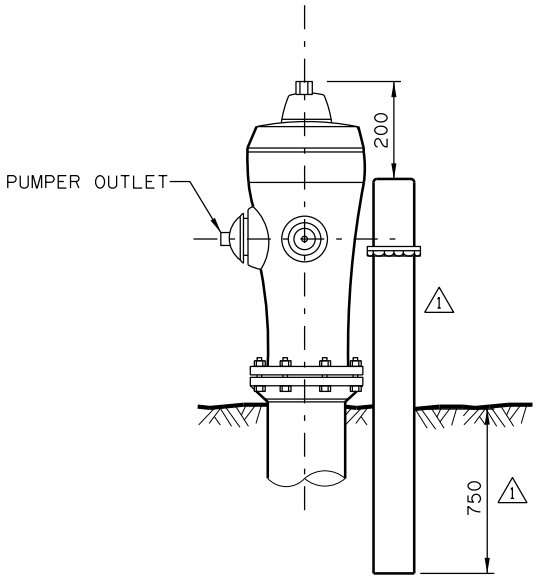

TEST POINT INSTALLATION AT A HYDRANT

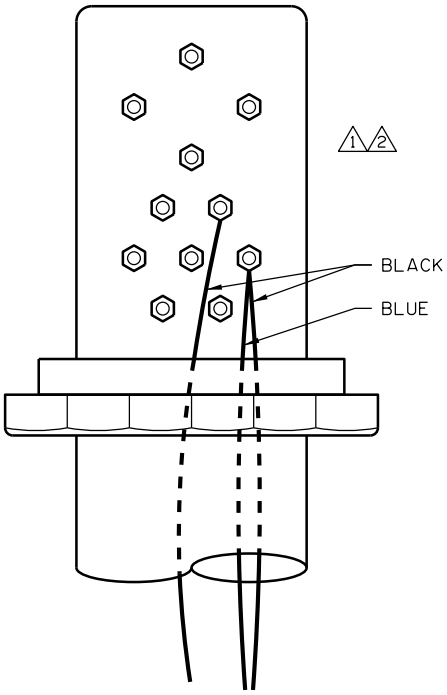

TEST POINT WIRING SCHEMATIC

DIMENSIONS ARE IN METRES UNLESS OTHERWISE NOTED

No.	Date	Revision	App'd
2	2022/03/30	REVISED DETAILS	DN
1	2018/05/03	REVISED DETAILS AND NOTES & ADDED DIMENSION	BN

Date 1995/12/07
Scale N.T.S.
Approved by for The City of Calgary

WATERWORKS CONSTRUCTION

TYPICAL TEST POINT AT A HYDRANT METALLIC PIPE SYSTEM

Sheet 18

File Number 453.1017.009

ISC: Unrestricted

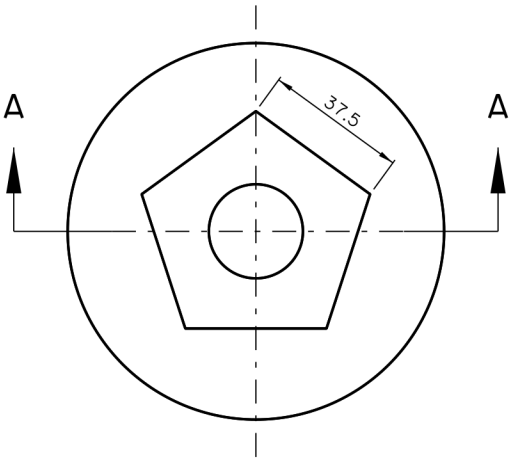

PLAN

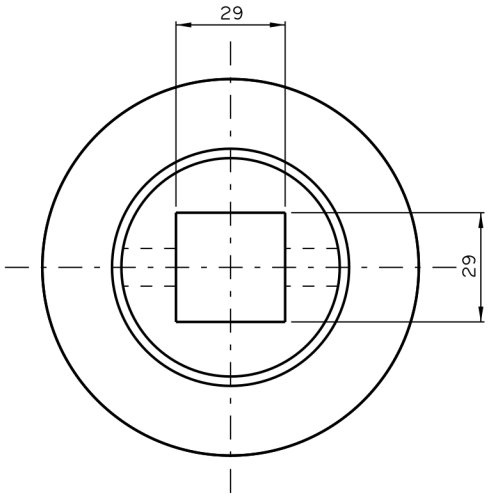

BOTTOM VIEW

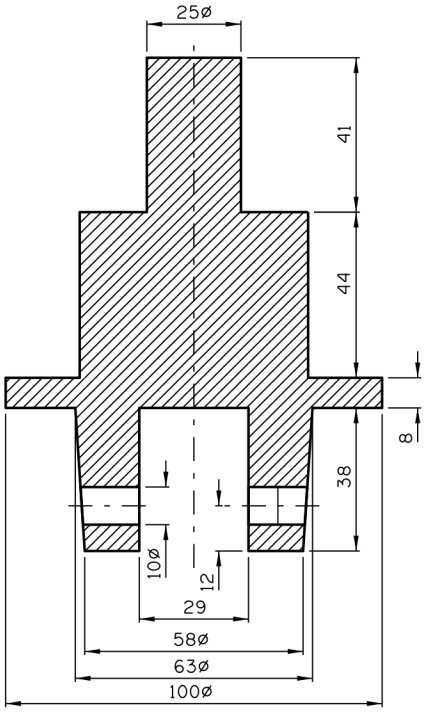

SECTION A-A

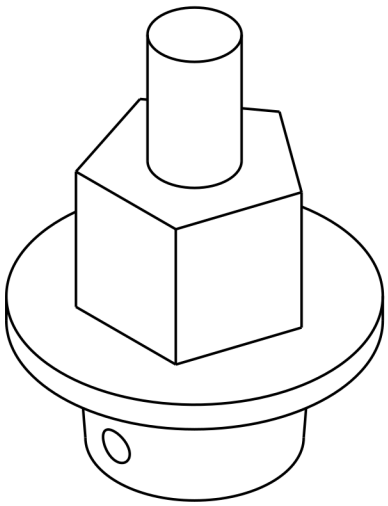

ISOMETRIC VIEW

NOTE:

MATERIAL TO BE GREY CAST IRON AND TO CONFORM TO CLASS 20 A.S.T.M. A48 (LATEST EDITION)

DIMENSIONS ARE IN MILLIMETRES UNLESS OTHERWISE NOTED

No.	Date	Revision	App'd

Date: 2018/05/23
Scale: N.T.S.
Approved by
for The City of Calgary

WATERWORKS CONSTRUCTION

RECLAIMED WATER SYSTEM
VALVE ROD TOP NUT

Sheet: 19

File Number: 453.1017.010

ISC: Unrestricted

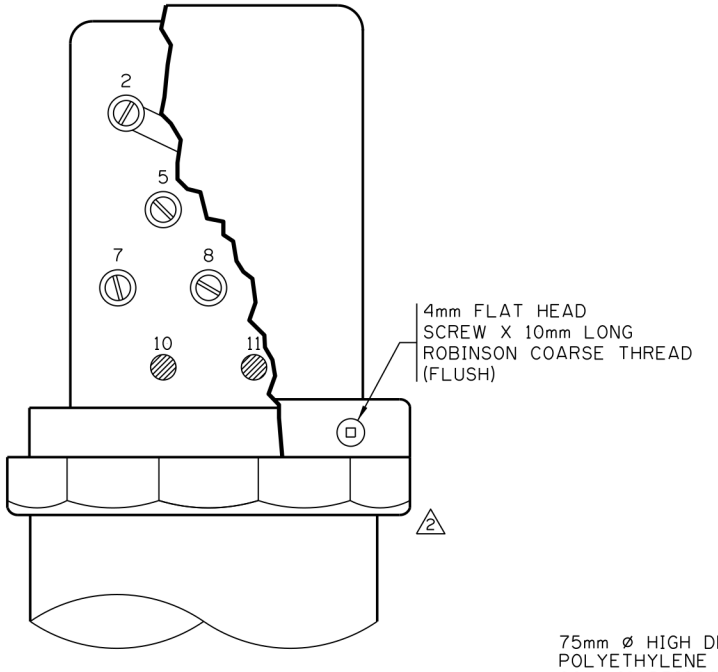

DETAIL 1

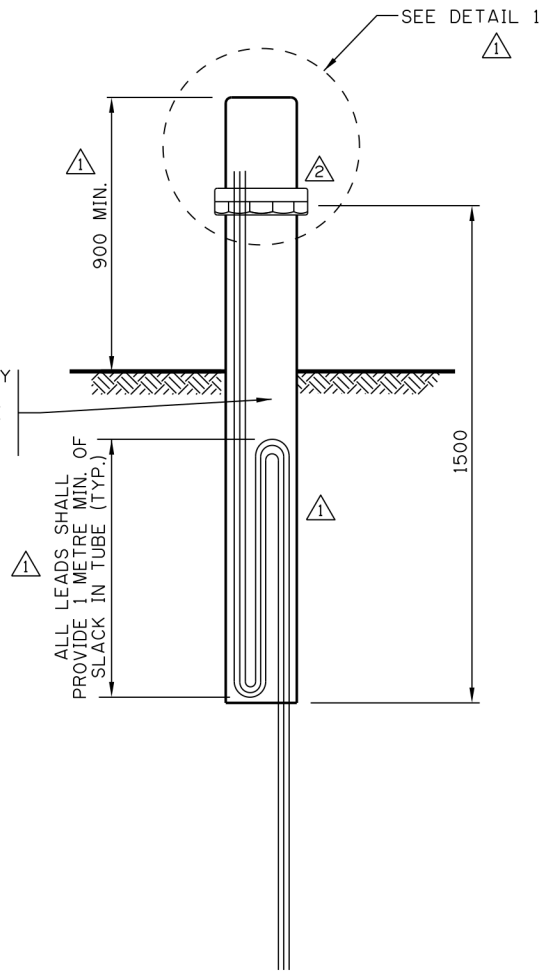

SECTION

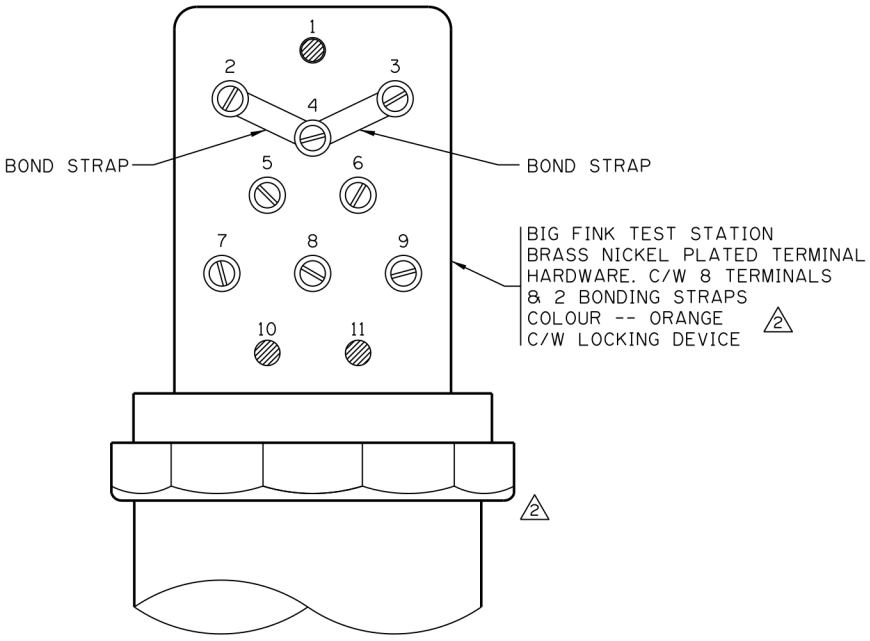

TERMINAL LAYOUT-STANDARD

NOTE:

1. REFER TO SHEET 18 FOR INSTALLATIONS AT HYDRANTS
2. STANDARD TERMINALS ATTACHED 2-9, 8 TERMINALS IN TOTAL

DIMENSIONS ARE IN MILLIMETRES
UNLESS OTHERWISE NOTED

No.	Date	Revision	App'd
2	2019/08/28	REVISED DETAIL	B.N.
1	2018/05/03	REVISED DETAIL, NOTES & TITLE	B.N.

Date: 1980/11/20
Scale: N.T.S.
Approved by: for The City of Calgary

WATERWORKS CONSTRUCTION

TYPICAL TEST POINT
FOR CATHODIC PROTECTION
(NOT AT HYDRANT) 1

Sheet: 20
File Number: 453.1017.011

ISC: Unrestricted

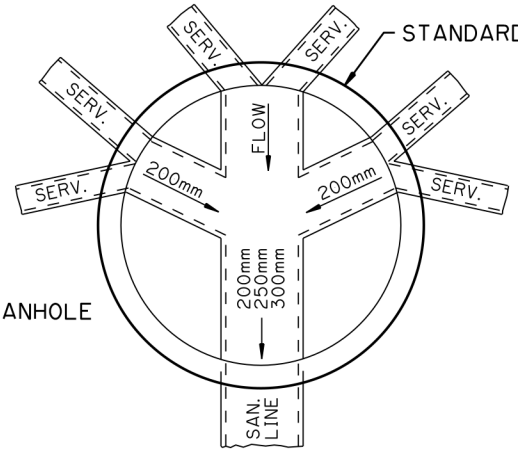

TYPICAL

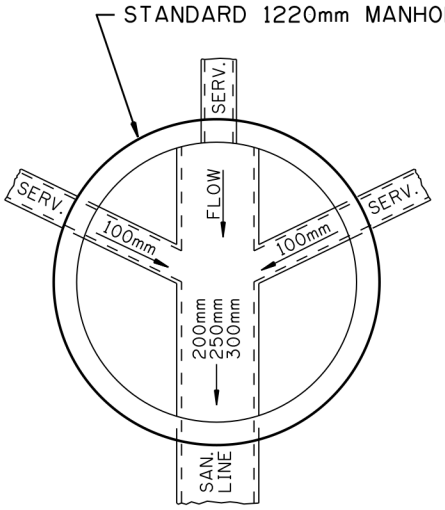

ALTERNATE #1

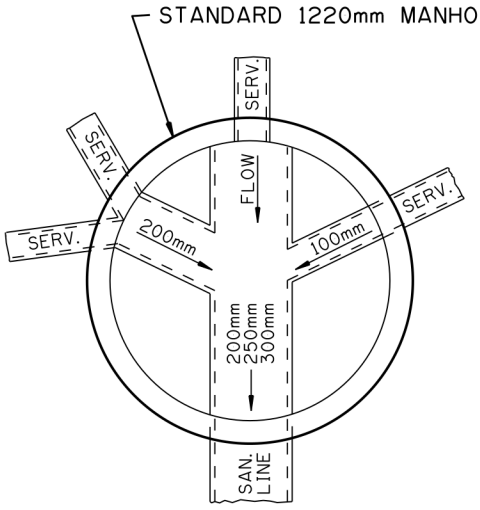

ALTERNATE #2

NOTE:

1. IN THE CASE OF MORE THAN 6 CONNECTIONS INTO A MANHOLE, A DETAIL DRAWING SHALL BE SUBMITTED TO THE ENGINEER FOR APPROVAL.
2. SEWER MAIN TO GO STRAIGHT THROUGH MANHOLE WITH 0.50 PIPE TO OPPOSITE WALL.
3. MAXIMIM HEIGHT OF INLET 300mm ABOVE INVERT OF OUTLET.
4. 0.50 PIPE BENCHING TO ACCOMMODATE BRANCH CONNECTIONS.
5. SERVICE CONNECTIONS INTO BARREL TO BE MACHINE CORED.
6. MIN. 100 FOR 1 SERVICE, MIN 200 FOR 2 SERVICES

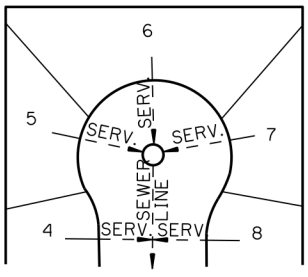

ALTERNATE #1

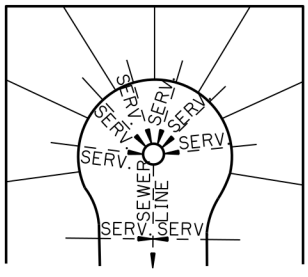

TYPICAL

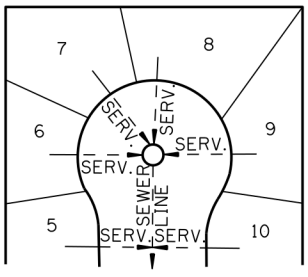

ALTERNATE #2

DIMENSIONS ARE IN MILLIMETRES UNLESS OTHERWISE NOTED

No.	Date	Revision	App'd
1	2007/08/23	REVISED NOTES ADD SERVICES TO TYPICAL	

Date: 2013/10/29
Scale: N.T.S.
Approved by: for The City of Calgary

THE CITY OF CALGARY — WATERWORKS CONSTRUCTION

SERVICE CONNECTION DETAILS FOR SANITARY SEWER MANHOLE IN CUL-DE-SAC

Sheet: 21

File Number: 452.1001.016

ISC: Unrestricted

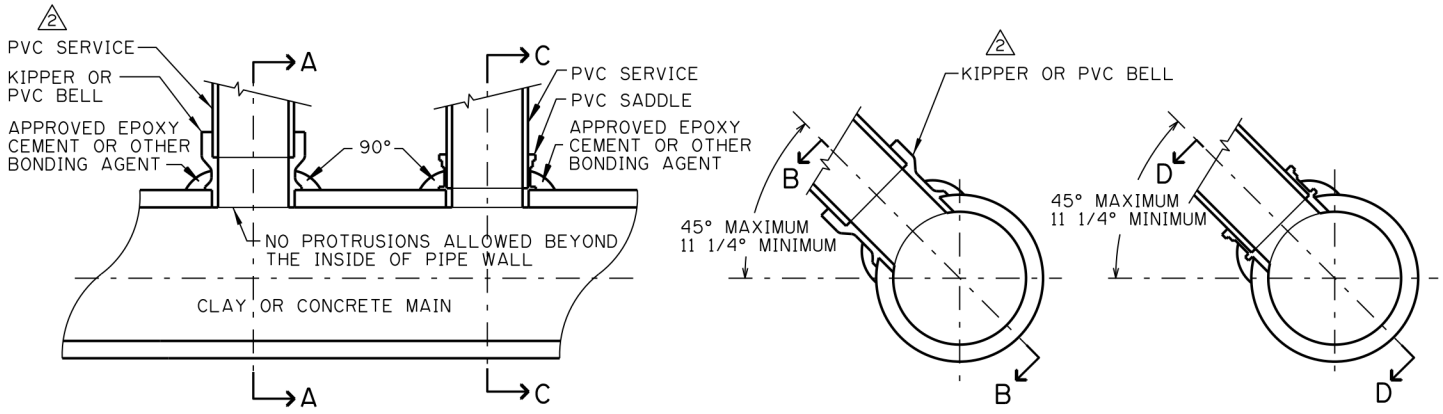

SECTION 'B-B' SECTION 'D-D' SECTION 'A-A' SECTION 'C-C'

2 TYPICAL KIPPER OR PVC CONNECTION

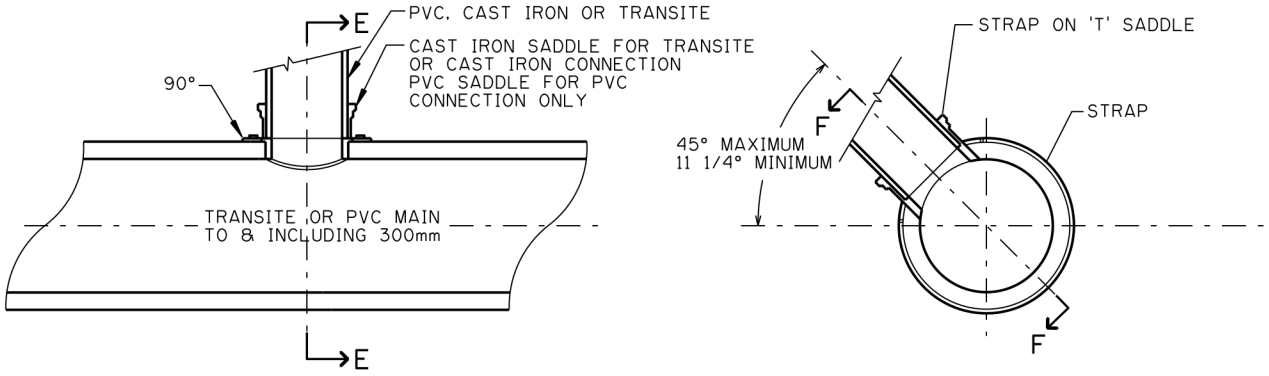

SECTION 'F-F' SECTION 'E-E'

NOTE: USE SHOP MANUFACTURED CONNECTIONS (TEES) FOR MAINS LARGER THAN 300mm PVC.

TYPICAL TRANSITE OR PVC CONNECTION

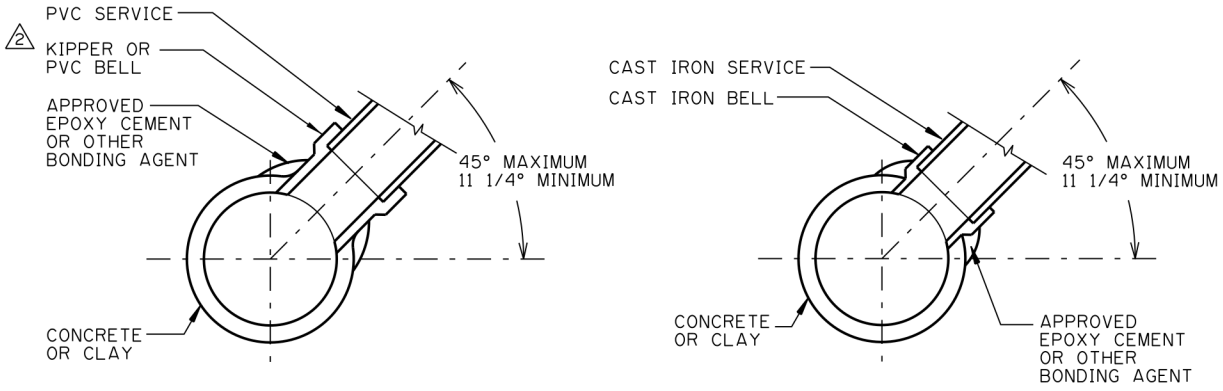

CROSS SECTION OF A TYPICAL SHOP MANUFACTURED CONCRETE OR CLAY CONNECTION

CROSS SECTION OF A TYPICAL CAST IRON CONNECTION

NOTE: -ALL FIELD CONNECTIONS TO BE CORED OUT.
1 -THE VERTICAL TAPPING ANGLE MAY BE REDUCED TO 5° IF APPROVED BY THE ENGINEER.

DIMENSIONS ARE IN MILLIMETRES UNLESS OTHERWISE NOTED

No.	Date	Revision	App'd
2	2017/02/09	REVISED NOTES AND DETAIL TITLE	MC
1	2004/01/10	ADDED NOTE	

Date 1999/09/14
Scale N.T.S.
Approved by for The City of Calgary

THE CITY OF CALGARY WATERWORKS CONSTRUCTION

SEWER SERVICE CONNECTIONS TO MAINS

Sheet 22
File Number 453.1003.008

ISC: Unrestricted

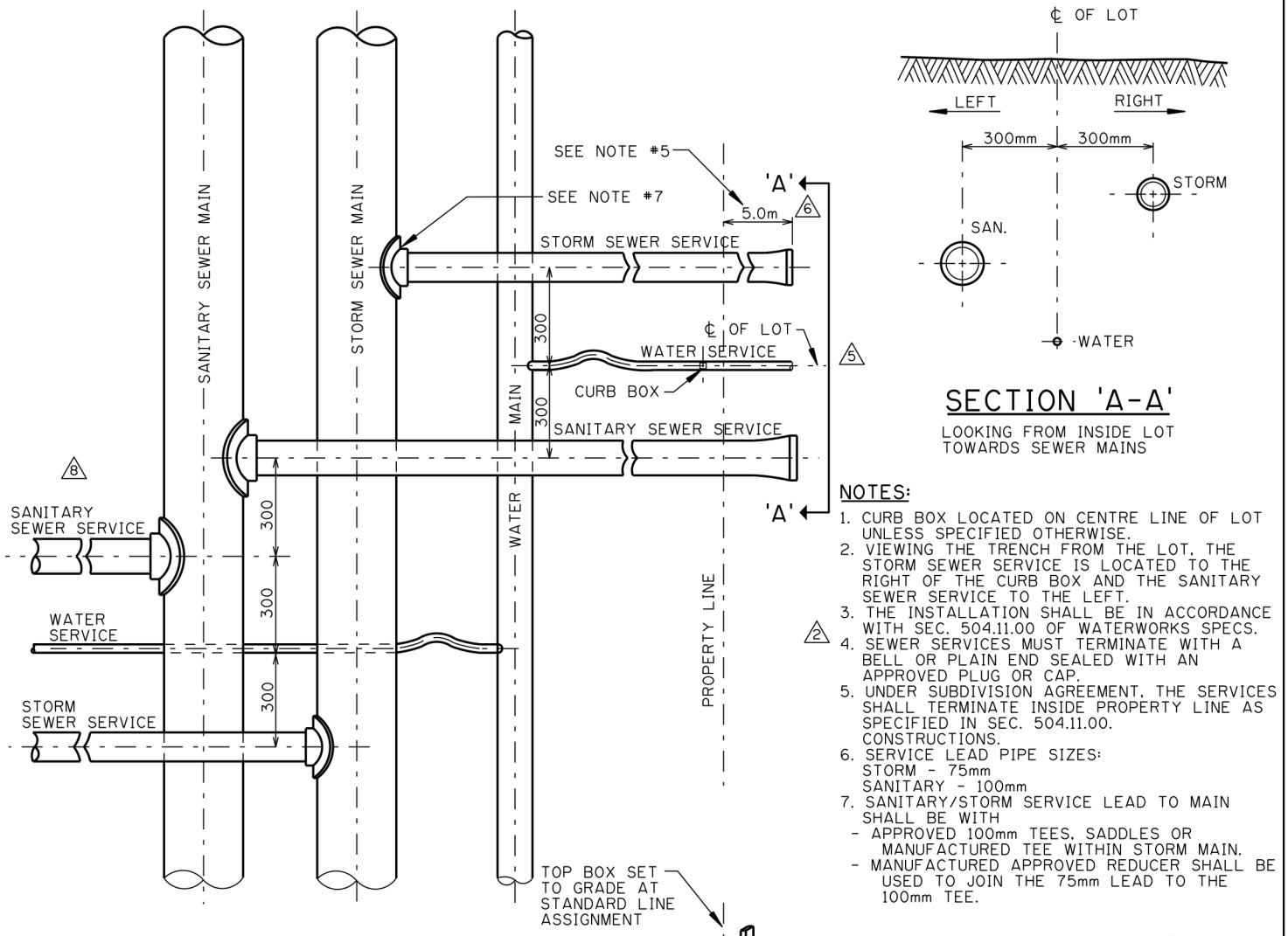

SECTION 'A-A'

LOOKING FROM INSIDE LOT TOWARDS SEWER MAINS

NOTES:

1. CURB BOX LOCATED ON CENTRE LINE OF LOT UNLESS SPECIFIED OTHERWISE.
2. VIEWING THE TRENCH FROM THE LOT, THE STORM SEWER SERVICE IS LOCATED TO THE RIGHT OF THE CURB BOX AND THE SANITARY SEWER SERVICE TO THE LEFT.
3. THE INSTALLATION SHALL BE IN ACCORDANCE WITH SEC. 504.11.00 OF WATERWORKS SPECS.
4. SEWER SERVICES MUST TERMINATE WITH A BELL OR PLAIN END SEALED WITH AN APPROVED PLUG OR CAP.
5. UNDER SUBDIVISION AGREEMENT, THE SERVICES SHALL TERMINATE INSIDE PROPERTY LINE AS SPECIFIED IN SEC. 504.11.00. CONSTRUCTIONS.
6. SERVICE LEAD PIPE SIZES:
   STORM - 75mm
   SANITARY - 100mm
7. SANITARY/STORM SERVICE LEAD TO MAIN SHALL BE WITH
   - APPROVED 100mm TEES, SADDLES OR MANUFACTURED TEE WITHIN STORM MAIN.
   - MANUFACTURED APPROVED REDUCER SHALL BE USED TO JOIN THE 75mm LEAD TO THE 100mm TEE.

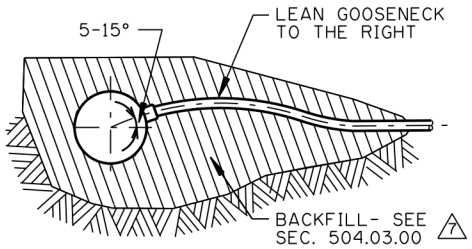

DETAIL 'A'

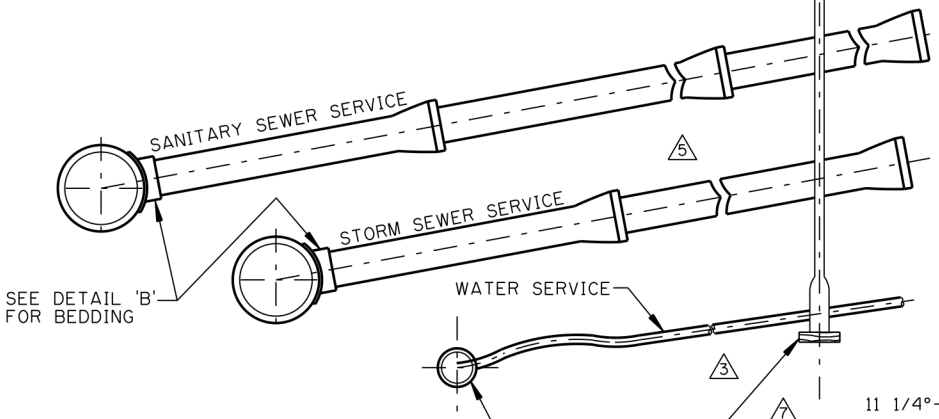

THE DEPTH OF THE WATER SERVICE PIPE AND SERVICE VALVE SHALL BE AS SPECIFIED IN SEC. 504.04.13.

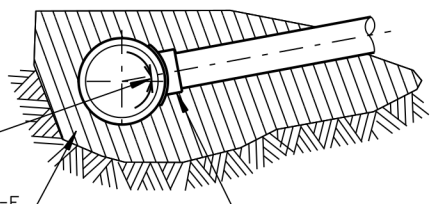

DETAIL 'B'

DIMENSIONS ARE IN MILLIMETRES UNLESS OTHERWISE NOTED

No.	Date	Revision	App'd
8	2015/04/27	ADDED SECOND SINGLE SERVICE	E.V.
7	2012/03/19	REVISED TEXT	B.N.
6	2007/10/16	REVISED DIMENSION	B.N.
5	2006/02/09	REVISED LABELS OF SERVICES	B.N.
4	2001/02/12	REVISED DESCRIPTION FROM SEC. 504.04.12	E.P.
3	2001/02/12	REVISED DESCRIPTION ON PIPE AND BLOCKING	E.P.

Date 1980/12/10
Scale N.T.S
Approved by for The City of Calgary

THE CITY OF CALGARY — WATERWORKS CONSTRUCTION

TYPICAL RESIDENTIAL SERVICE INSTALLATION

Sheet 23
File Number 453.1003.001

ISC: Unrestricted

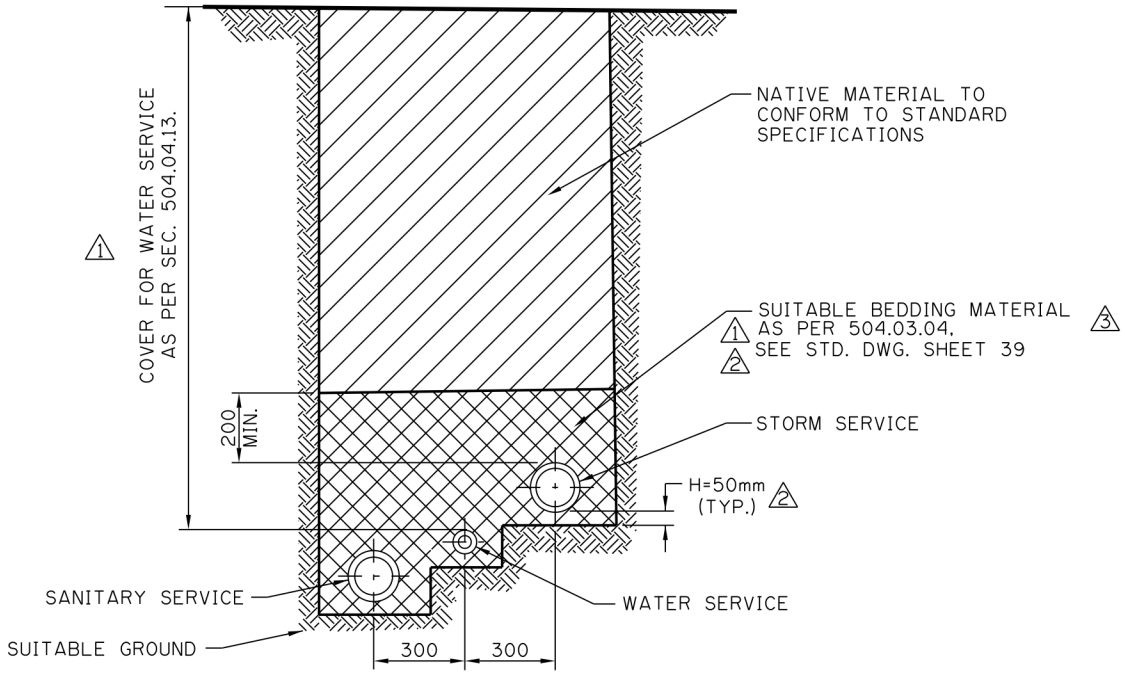

SERVICES AT DIFFERENT ELEVATIONS IN SUITABLE GROUND

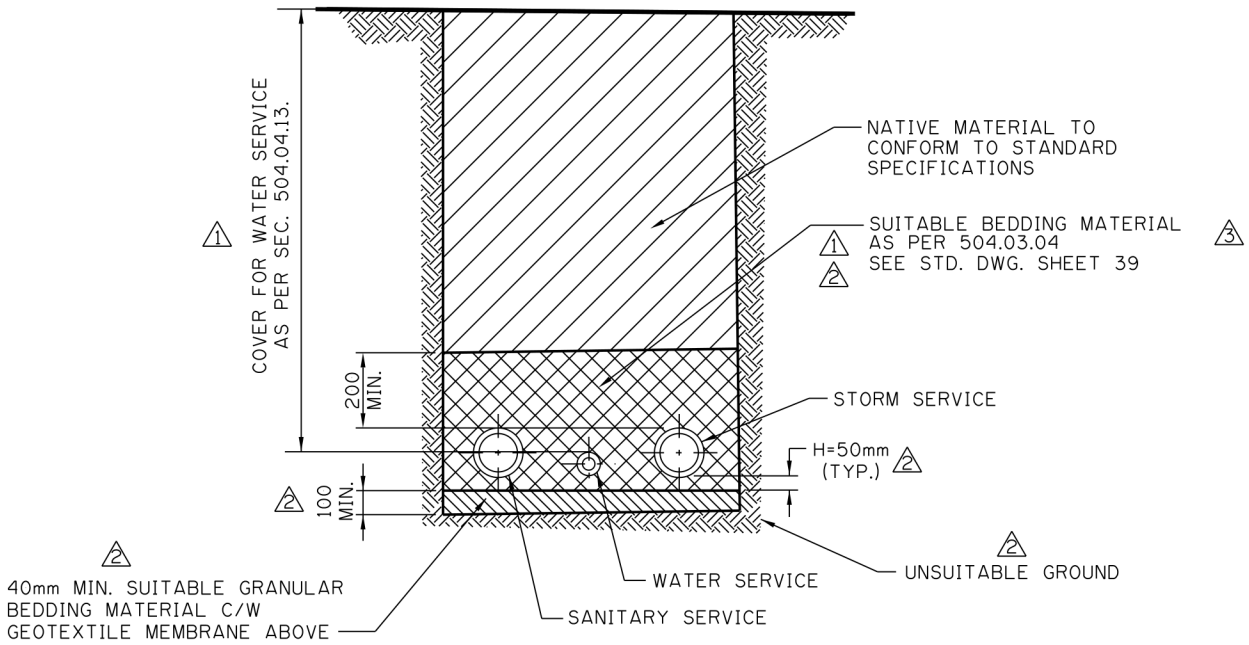

SERVICES IN UNSUITABLE GROUND

1 NOTE: BACKFILLING AND COMPACTION TO BE IN ACCORDANCE WITH SECTION 504.08.00 OF THESE SPECIFICATIONS.

DIMENSIONS ARE IN MILLIMETRES UNLESS OTHERWISE NOTED

No.	Date	Revision	App'd
3	2012/03/07	REVISED NOTES	B.N.
2	2008/01/18	REVISED & REMOVED TEXT, ADDED DIMS, REVISED DRAWING	B.N.
1	2005/02/07	REVISED NOTE AND DRAWING	B.N.

Date 1980/12/11
Scale N.T.S.
Approved by for The City of Calgary

THE CITY OF CALGARY WATERWORKS CONSTRUCTION

STANDARD BACKFILLING FOR SERVICES

Sheet 24

File Number 453.1003.002

ISC: Unrestricted

SERVICE VALVE RODS

TYPE A
FOR 20 & 25mm VALVES
(ROD OD. 12.7mm)

TYPE B
FOR 40 & 50mm VALVES
(ROD OD. 15.9mm)

MATERIAL SPECIFICATIONS

ROD
304 STAINLESS STEEL
ASTM A276-94b / A479-94a
COLD FINISHED. TENSILE 90.000 psi MIN.

CLEVIS CASTING
MANGANESE BRONZE
CDA C86500
S.A.E. STANDARD #43
TENSILE: 65.000 psi MIN.
OR:
STAINLESS STEEL
ASTM A743 / A743M-94a
GRADE CF8(304)
TENSILE: 70.000 psi MIN.

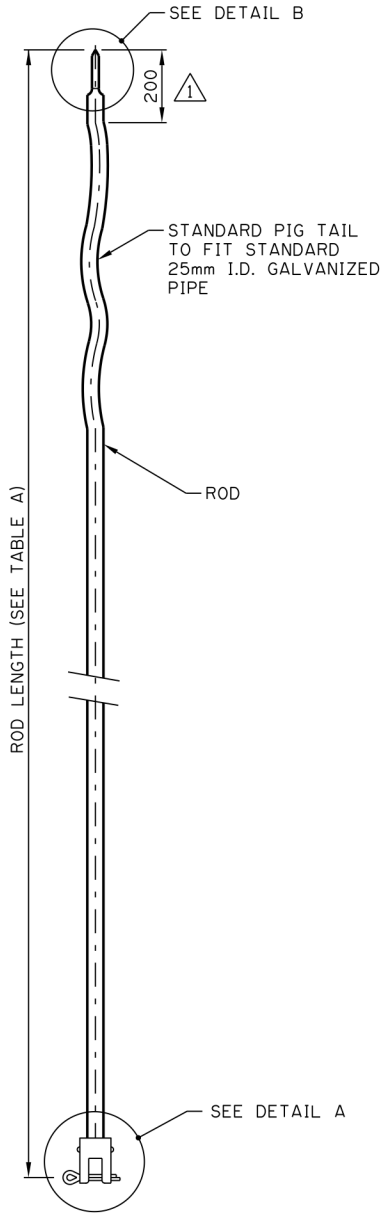

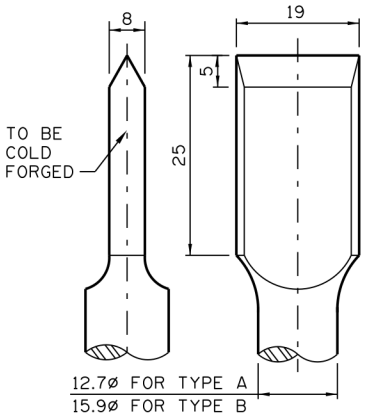

DETAIL B

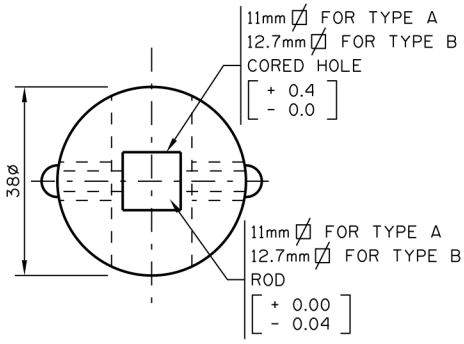

SECTION A-A

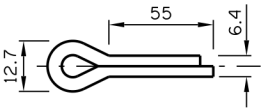

BRASS COTTER PIN

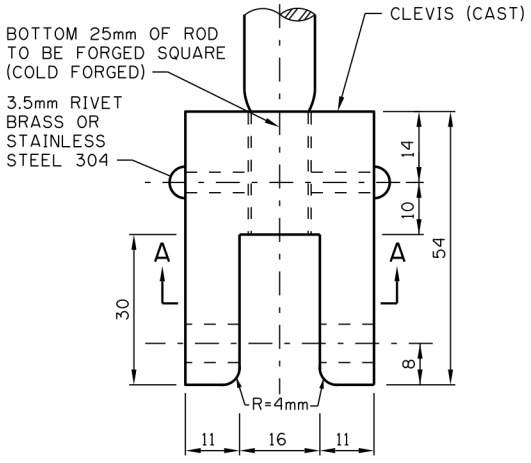

PLAN VIEW

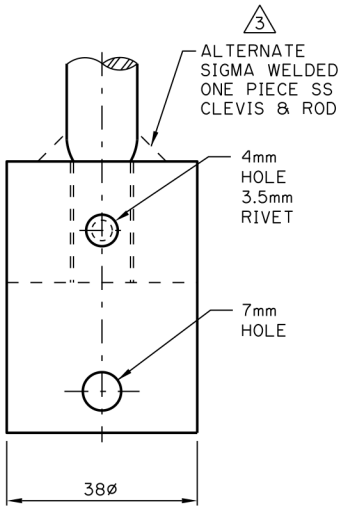

SIDE VIEW

TABLE A

DEPTH OF COVER	ROD LENGTH	CASING LENGTH
2.4m	2.1m	1.9m
2.7m	2.4m	2.2m
3.0m	2.7m	2.5m
3.3m	3.0m	2.8m

2

DETAIL A

REF. STD. SEC. 503.02.22

DIMENSIONS ARE IN MILLIMETRES
UNLESS OTHERWISE NOTED

No.	Date	Revision	App'd
3	2017/01/10	ADDED SS WELDED CLEVIS & NOTE	B.N.
2	2007/01/31	REVISED ROD & CASING LENGTH IN TABLE A	B.N.
1	2001/02/13	REVISED LENGTH OF ROD END	E.P.

Date 1997/11/01
Scale N.T.S.
Approved by
for The City of Calgary

THE CITY OF CALGARY — WATERWORKS CONSTRUCTION

OPERATING ROD FOR
20mm-50mm SERVICE VALVES
TYPE A AND TYPE B

Sheet 25
File Number 453.1006.015

ISC: Unrestricted

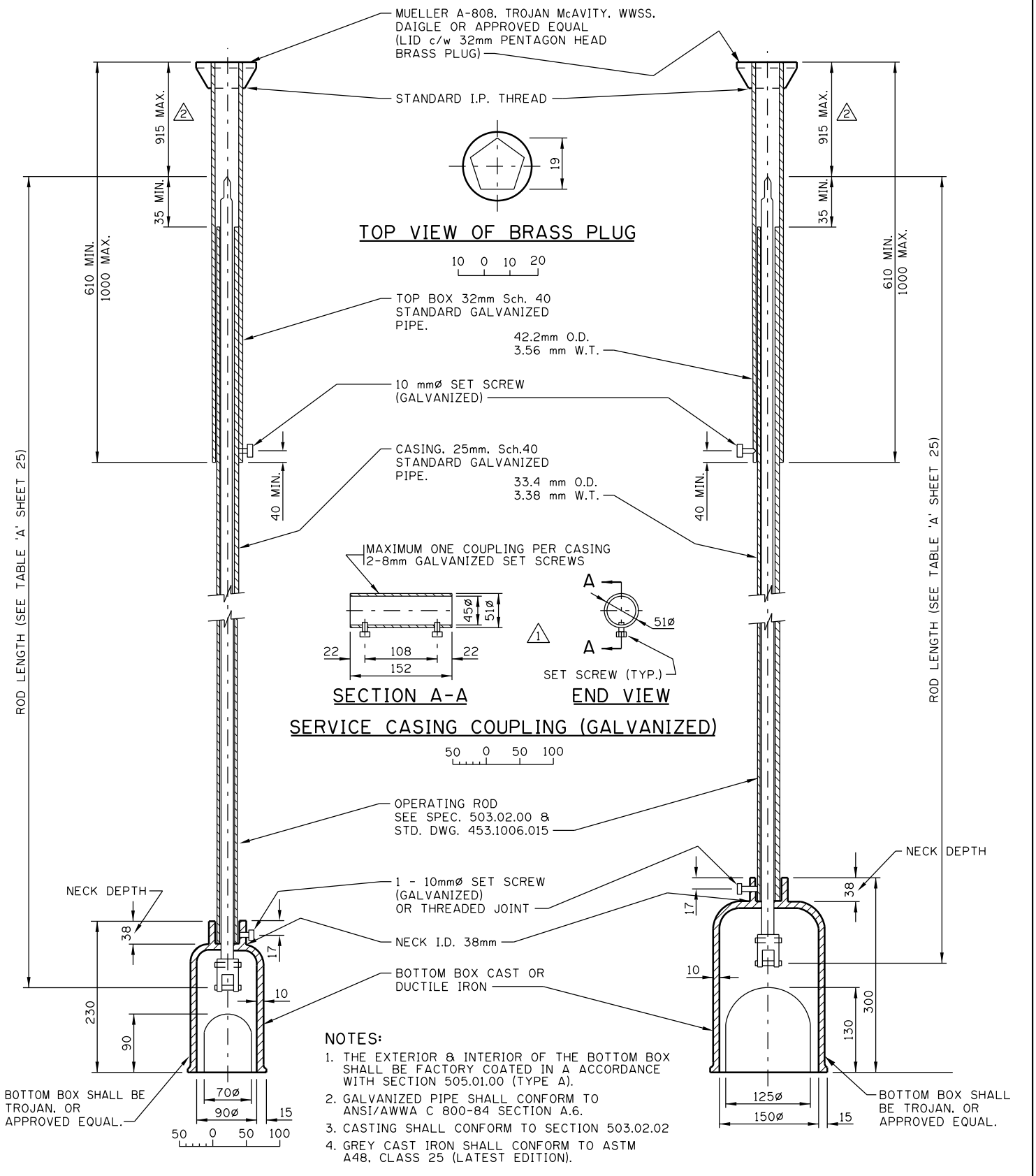

NOTES:

1. THE EXTERIOR & INTERIOR OF THE BOTTOM BOX SHALL BE FACTORY COATED IN A ACCORDANCE WITH SECTION 505.01.00 (TYPE A).
2. GALVANIZED PIPE SHALL CONFORM TO ANSI/AWWA C 800-84 SECTION A.6.
3. CASTING SHALL CONFORM TO SECTION 503.02.02
4. GREY CAST IRON SHALL CONFORM TO ASTM A48, CLASS 25 (LATEST EDITION).

FOR 20mm & 25mm VALVES

FOR 40mm & 50mm VALVES

DIMENSIONS ARE IN MILLIMETRES UNLESS OTHERWISE NOTED

No.	Date	Revision	App'd
2	2022/03/09	ADDED DIMENSIONS	D.N.
1	2003/02/27	ADDED SERVICE CASING COUPLING DETAIL	B.N.

Date 1984/01/10
Scale N.T.S.
Approved by for The City of Calgary

WATERWORKS CONSTRUCTION

SERVICE VALVE OPERATING ASSEMBLY FOR 20mm - 50mm VALVE

Sheet 26

File Number 453.1033.001

ISC: Unrestricted

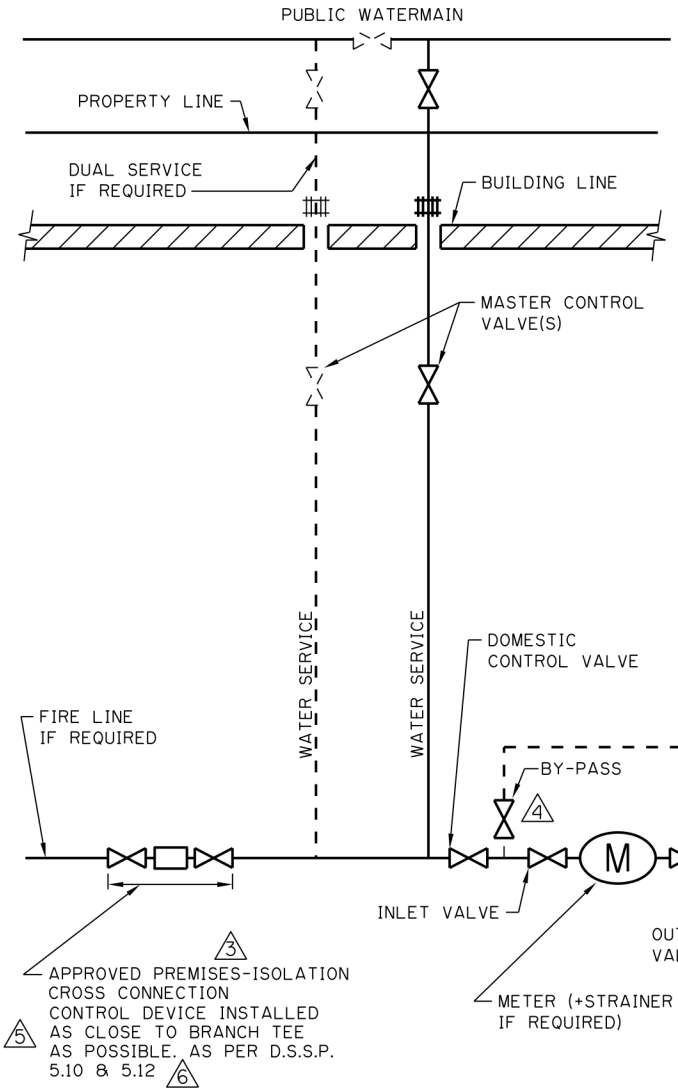

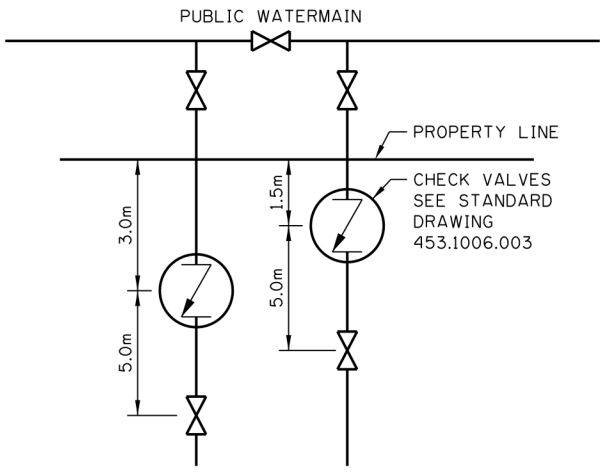

LARGE COMMERCIAL/OR MULTI-FAMILY SITES

(WITH 60 OR MORE RESIDENTIAL UNITS)
WHERE A LOOPED SYSTEM IS REQUIRED 5 1

2 HIGH RISE RESIDENTIAL APARTMENT OR COMMERCIAL DEVELOPMENT

NOTES:

4 ✳ NEW REQUIREMENT - SEE NOTE 9

1 2 1. DUAL SERVICE IS REQUIRED FOR 80 OR MORE HIGH RISE RESIDENTIAL UNITS OR COMMERCIAL DEVELOPMENTS AS SPECIFIED BY THE CITY ENGINEER.

2. THE MASTER CONTROL VALVE(S) SHALL BE WITHIN 1.0m OF THE SERVICE ENTRY. THE FIRST FLANGE SHALL BE ANCHORED AS PER DWG. 453.1009.009.

3. VALVES 75mm AND LARGER SHALL BE AS FOLLOWS:
MASTER AND DOMESTIC CONTROL VALVES
- RESILIENT SEATED RISING SPINDLE (OS & Y) FLANGED GATE VALVES.(UL OR ULC LISTED) FOR FIRE LINES AND CSA APPROVED FOR DOMESTIC LINES; OR
- SHORT BODY, RUBBER SEATED FLANGED OR LUG WAFER TYPE BUTTERFLY VALVE C/W HAND WHEEL, REDUCTION GEAR OPERATOR, POSITION INDICATOR (UL OR ULC LISTED) PROVIDED THEY ARE NOT IN A SUCTION LINE FOR FIRE PUMP(S).

METER VALVES ON INLET, OUTLET AND BY-PASS
- RESILENT SEATED RISING SPINDLE (OS & Y) FLANGED GATE VALVES.CSA APPROVED.

4. IF A SERVICE SUPPLIES BOTH FIRE AND DOMESTIC, A DOMESTIC CONTROL VALVE IS REQUIRED IF THE METER INLET VALVE IS LOCATED MORE THAN 3m FROM THE MASTER CONTROL VALVE.

5. WATER METER SETTINGS SHALL CONFORM TO STD. DWG. 453.1009.009 FOR 75mm AND LARGER METERS. STD. DWG. 453.1009.006, 453.1009.007 AND 453.1009.008 FOR 50mm AND SMALLER METERS.

6. A METER BY-PASS IS REQUIRED FOR 40mm AND LARGER METERS.THE BY-PASS PIPE SHALL BE THE SAME SIZE AS THE MAIN PIPE.

7. FOR DOMESTIC SERVICES THAT REQUIRE A 24 HOUR UNINTERRUPTED WATER SUPPLY, A PARALLEL CROSS 4 CONNECTION CONTROL (CCC) ARRANGEMENT MUST BE INSTALLED TO FACILITATE ANNUAL TESTING & ROUTINE MAINTENANCE OF THE CCC DEVICE(S).

8. ALL CROSS CONNECTION CONTROL DEVICES SHALL BE CSA APPROVED AND INSTALLED IN THE ORIENTATION 4 APPROVED BY CSA. (SEE APPROVAL LISTING, WWW.CSA-INTERNATIONAL.ORG OR CONTACT CROSS CONNECTION CONTROL AT 311)

9. AN APPROVED PREMISES-ISOLATING CROSS CONNECTION 4 CONTROL DEVICE SHALL BE INSTALLED IMMEDIATELY AFTER THE WATER METER OUTLET VALVE ON ALL IRRIGATION SERVICES.

5 10. REVERSED DASHED DETAIL ON CURRENT DRAWING.

DIMENSIONS ARE IN METRES
UNLESS OTHERWISE NOTED

No.	Date	Revision	App'd
6	2015/12/15	ADDED NOTE	B.N.
5	2013/01/15	REVISED & ADDED NOTES	B.N.
4	2007/11/29	REVISED & ADDED NOTES. REVISED DRAWING	B.N.
3	2006/02/09	REVISED NOTE	B.N.
2	2005/01/25	ADDED "HIGH RISE"	B.N.
1	2003/02/27	REVISED NOTE No.1 AND MULTI-FAMILY SITE DETAIL	B.N.

Date 1986/12/29
Scale N.T.S.
Approved by for The City of Calgary

THE CITY OF CALGARY WATERWORKS CONSTRUCTION

SERVICING REQUIREMENTS FOR APARTMENTS, MULTI-FAMILY AND COMMERCIAL

Sheet 27
File Number 453.1026.001

ISC: Unrestricted

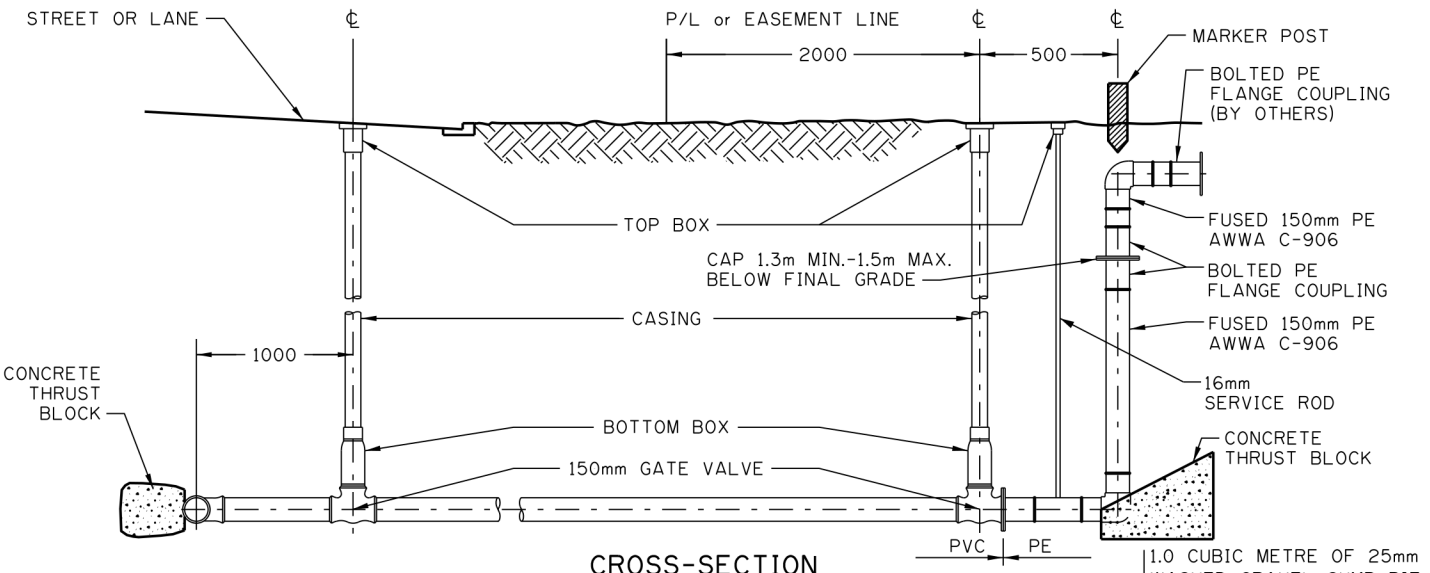

CROSS-SECTION

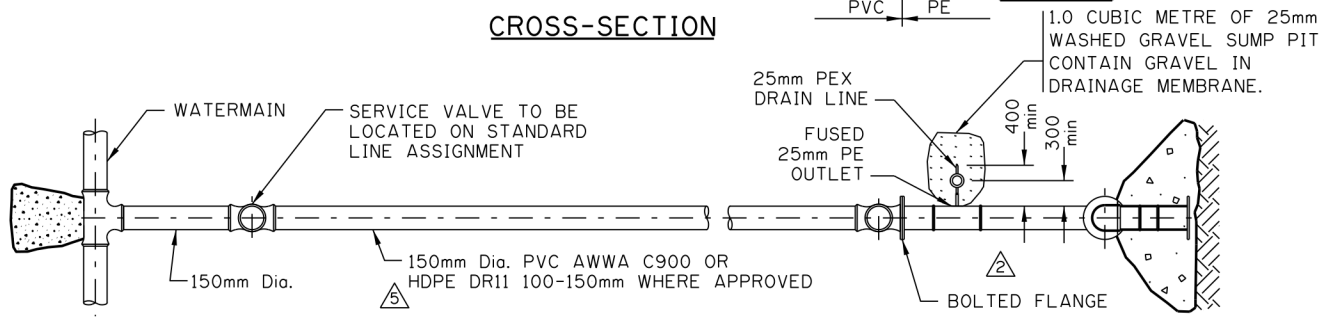

PLAN VIEW

1 TYPICAL 150mm PARKS WATER SERVICE

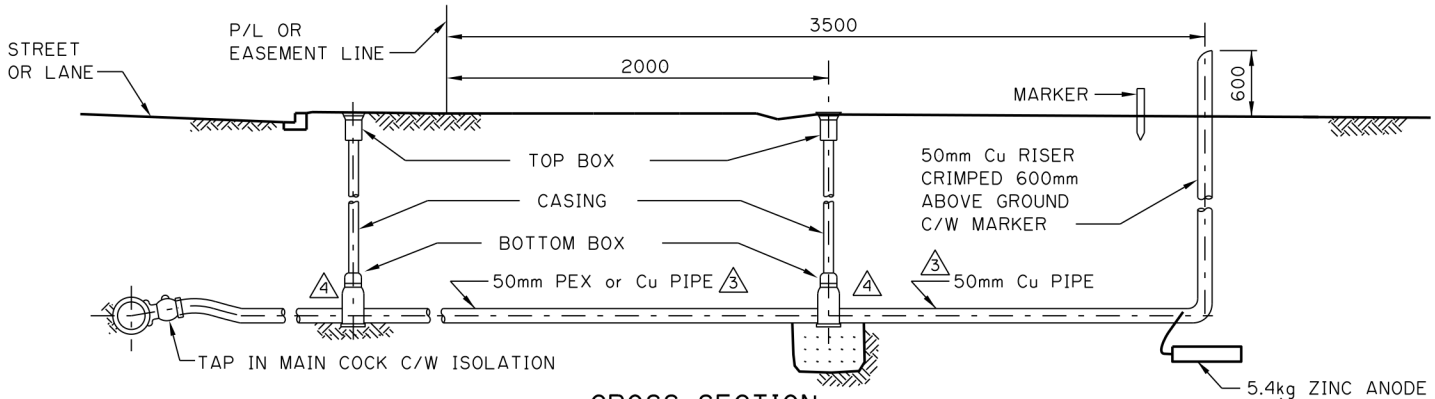

CROSS-SECTION

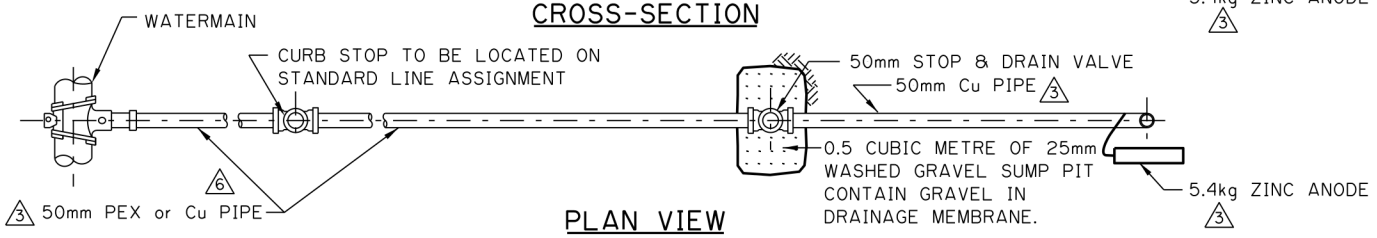

PLAN VIEW

TYPICAL 50mm PARKS WATER SERVICE

NOTE:

1. PARKS WATER SERVICE SHALL BE INSTALLED AND CATHODICALLY PROTECTED IN ACCORDANCE TO THE CITY OF CALGARY STANDARD SPECIFICATIONS WATERWORKS CONSTRUCTION.
2. FOR IRRIGATION SYSTEM DESIGN CONSULT LATEST CITY OF CALGARY, PARK DEVELOPMENT & OPERATIONS, DEVELOPMENT GUIDELINES AND STANDARD SPECIFICATIONS LANDSCAPE CONSTRUCTION.
3. CALL PARK DEVELOPMENT & OPERATIONS FOR INSPECTION ON PARKS PROPERTY.
4. DRAINAGE MEMBRANE, SEE SEC. 320 STD. SPEC. STREETS CONSTRUCTION.

DIMENSIONS ARE IN MILLIMETRES UNLESS OTHERWISE NOTED

No.	Date	Revision	App'd
6	19/08/28	REVISED DETAIL	B.N.
5	17/04/25	REVISED COMMENT	B.N.
4	07/10/01	REVISED DRAWING	B.N.
3	07/01/08	REVISED MATERIAL TYPE & ADDED ANODE	B.N.
2	03/02/27	ADDED DIMENSIONS TO 25mm DRAIN LINE	B.N.
1	02/02/14	REVISED 150mm PARKS WATER SERVICE	B.N.

Date 1987/01/15
Scale N.T.S.
Approved by for The City of Calgary

WATERWORKS CONSTRUCTION

PARKS WATER SERVICE DETAIL 50mm AND 150mm

Sheet 28

File Number 453.1030.001

ISC: Unrestricted

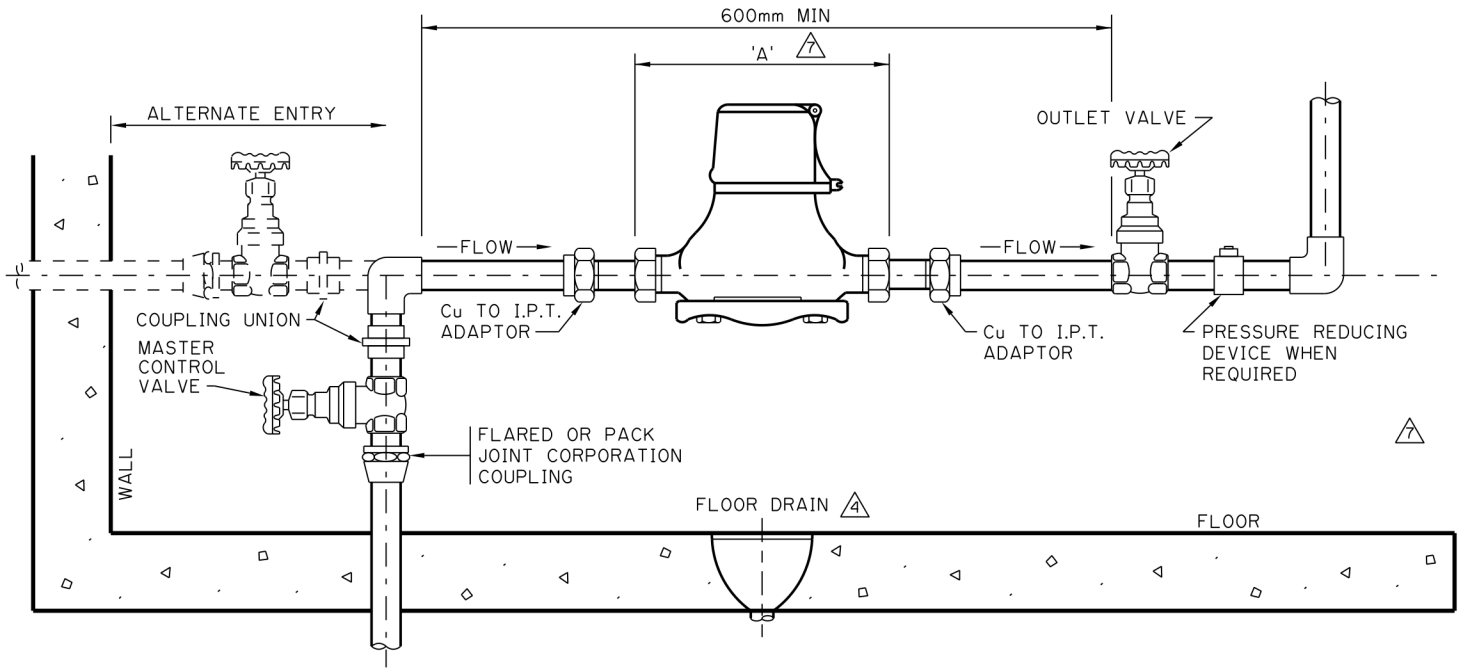

METER SETTING REQUIREMENTS

8 PROVIDE 300mm WORKING CLEARANCE IN FRONT OF AND ON BOTH SIDES OF THE METER TO PERMIT INSTALLATION AND SERVICING. TOP OF HIGHEST METER TO BE MAXIMUM OF 1.6m FROM FLOOR.

7 6 5

METER SPACER LENGTH	'A'
20mm - (3/4")	229mm
25mm - (1")	273mm

NOTES:

1. PIPING ON EACH SIDE OF METER MUST BE ADEQUATELY SUPPORTED TO THE SATISFACTION OF THE WATERWORKS
2. PIPING FOR METER MUST BE ON A HORIZONTAL PLANE.
7. 3. MINIMUM DISTANCE OF 300mm BETWEEN ANY WALL OR FLOOR AND A METER OR METER TREE.
4. VALVES ARE REQUIRED ADJACENT TO METERS (INLET AND OUTLET SIDE). OUTLET VALVE NOT REQUIRED IF CROSS CONNECTION CONTROL DEVICE C/W VALVES IS INSTALLED WITHIN 1m OF METER.
5. THE AREA FOR 600mm IN FRONT OF THE METER SHALL BE FREE OF OBSTRUCTION TO ALLOW FOR CONVENIENT READING AND SERVICING OF THE METER. 2 METER HEADROOM MUST BE PROVIDED IN THIS AREA.
6. METERS MUST BE INSTALLED IN THE MECHANICAL ROOM AND WITHIN REASONABLE DISTANCE OF A FLOOR DRAIN. IN NO CASE SHALL A METER BE INSTALLED IN A BATHROOM, BEDROOM, CRAWL SPACE, GARAGE OR UNDER A STAIRWELL. METER LOCATIONS MUST BE APPROVED BY WATERWORKS.
7. METER SPACERS WILL BE SUPPLIED BY CITY OF CALGARY (FOR USE WITHIN CITY LIMITS ONLY) PHONE 268-4020.
6 1 8. ALL FITTINGS AND PIPE ARE TO BE BRASS, SOLDERED COPPER, PEX, OR APPROVED ALTERNATE, EXCEPT WHERE NOTED.
9. WHERE SOLDERED VALVES ARE BEING USED, COPPER TO FEMALE I.P.T. ADAPTERS MUST BE SUPPLIED TO ACCOMMODATE METER TAILPIECES.
10. SERVICE VALVES, MAIN VALVES OR ANY OTHER CITY OWNED WATERWORKS APPURTENANCES SHALL BE OPERATED BY WATERWORKS PERSONNEL ONLY.
3 11. THE MASTER CONTROL AND OUTLET VALVES SHALL BE FULL PORT GATE VALVES OR BALL VALVES AND SHALL CONFORM TO THE NATIONAL PLUMBING CODE OF CANADA (FOR INQUIRIES CALL 311 TO CONTACT THE PLUMBING & GAS SAFETY CODES OFFICER).
3 12. AN APPROVED CROSS CONNECTION CONTROL DEVICE SHALL BE INSTALLED IMMEDIATELY AFTER THE WATER METER OUTLET VALVE ON ALL COMMERCIAL, INDUSTRIAL AND MULTI FAMILY RESIDENTIAL (3 UNITS OR MORE) SERVICES. FOR INQUIRIES CALL 311 TO CONTACT CROSS CONNECTION CONTROL.
13. AN APPROVED PREMISES-ISOLATING CROSS CONNECTION CONTROL DEVICE SHALL BE INSTALLED IMMEDIATELY AFTER THE WATER METER OUTLET VALVE ON ALL IRRIGATION SERVICES.
3 14. WATER CONNECTIONS (IE. DRAIN DOWN VALVE OR HOSE BIBB ETC.) SHALL NOT BE PERMITTED BEFORE THE APPROVED CROSS CONNECTION CONTROL DEVICE. FOR INQUIRY CALL 311.
6 15. METERS ARE SIZED ONE PIPE SIZE SMALLER THAN THE DIAMETER OF SERVICE PIPE INSTALLED UNLESS OTHERWISE SUPPORTED BY DESIGN CALCULATIONS.

DIMENSIONS ARE IN MILLIMETRES UNLESS OTHERWISE NOTED

No.	Date	Revision	App'd
8	2018/04/12	REMOVED NOTES & ADDED METER SETTING REQUIREMENTS NOTE	B.N.
7	2017/03/10	REVISED TABLE, NOTE AND REMOVED DIMENSION 'B'	B.N.
6	2017/02/07	ADDED NOTES, DIMENSION AND 15mm COMMENT	
5	2016/01/19	REMOVED 15mm COMMENT	B.N.
4	2010/11/21	ADDED FLOOR DRAIN	B.N.
3	2008/10/15	ADDED NOTE No. 14 & REVISED No. 11 & 12	B.N.

Date 1995/12/06
Scale N.T.S.
Approved by for The City of Calgary

WATERWORKS CONSTRUCTION

TYPICAL METER INSTALLATION
20mm & 25mm
5 6

Sheet 29
File Number 453.1009.006

ISC: Unrestricted

METER SPACER LENGTH	'A'
15mm - (5/8")	190mm
20mm - (3/4")	229mm
25mm - (1")	273mm

1

NOTES:

1. PIPING ON EACH SIDE OF METER MUST BE ADEQUATELY SUPPORTED TO THE SATISFACTION OF THE WATERWORKS
2. PIPING FOR METER MUST BE ON A VERTICAL PLANE.
1 3. MINIMUM DISTANCE OF 300mm BETWEEN ANY WALL OR FLOOR AND A METER OR METER TREE.
4. VALVES ARE REQUIRED ADJACENT TO METERS (INLET AND OUTLET SIDE). OUTLET VALVE NOT REQUIRED IF CROSS CONNECTION CONTROL DEVICE C/W VALVES IS INSTALLED WITHIN 1m OF METER.
5. THE AREA FOR 600mm IN FRONT OF THE METER SHALL BE FREE OF OBSTRUCTION TO ALLOW FOR CONVENIENT READING AND SERVICING OF THE METER. 2 METER HEADROOM MUST BE PROVIDED IN THIS AREA.
6. METERS MUST BE INSTALLED IN THE MECHANICAL ROOM AND WITHIN REASONABLE DISTANCE OF A FLOOR DRAIN. IN NO CASE SHALL A METER BE INSTALLED IN A BATHROOM, BEDROOM, CRAWL SPACE, GARAGE OR UNDER A STAIRWELL. METER LOCATIONS MUST BE APPROVED BY WATERWORKS.
7. METER SPACERS WILL BE SUPPLIED BY CITY OF CALGARY (FOR USE WITHIN CITY LIMITS ONLY) PHONE 268-4020.
8. ALL FITTINGS AND PIPE ARE TO BE BRASS, SOLDERED COPPER, PEX, OR APPROVED ALTERNATE, EXCEPT WHERE NOTED.
9. WHERE SOLDERED VALVES ARE BEING USED, COPPER TO FEMALE I.P.T. ADAPTERS MUST BE SUPPLIED TO ACCOMMODATE METER TAILPIECES.
10. SERVICE VALVES, MAIN VALVES OR ANY OTHER CITY OWNED WATERWORKS APPURTENANCES SHALL BE OPERATED BY WATERWORKS PERSONNEL ONLY.
11. THE MASTER CONTROL AND OUTLET VALVES SHALL BE FULL PORT GATE VALVES OR BALL VALVES AND SHALL CONFORM TO THE NATIONAL PLUMBING CODE OF CANADA (FOR INQUIRIES CALL 311 TO CONTACT THE PLUMBING & GAS SAFETY CODES OFFICER).
12. AN APPROVED CROSS CONNECTION CONTROL DEVICE SHALL BE INSTALLED IMMEDIATELY AFTER THE WATER METER OUTLET VALVE ON ALL COMMERCIAL, INDUSTRIAL AND MULTI FAMILY RESIDENTIAL (3 UNITS OR MORE) SERVICES. FOR INQUIRIES CALL 311 TO CONTACT CROSS CONNECTION CONTROL.
13. AN APPROVED PREMISES-ISOLATING CROSS CONNECTION CONTROL DEVICE SHALL BE INSTALLED IMMEDIATELY AFTER THE WATER METER OUTLET VALVE ON ALL IRRIGATION SERVICES.
14. WATER CONNECTIONS (IE. DRAIN DOWN VALVE OR HOSE BIBB ETC.) SHALL NOT BE PERMITTED BEFORE THE APPROVED CROSS CONNECTION CONTROL DEVICE. FOR INQUIRY CALL 311.
15. METERS ARE SIZED ONE PIPE SIZE SMALLER THAN THE DIAMETER OF SERVICE PIPE INSTALLED UNLESS OTHERWISE SUPPORTED BY DESIGN CALCULATIONS.

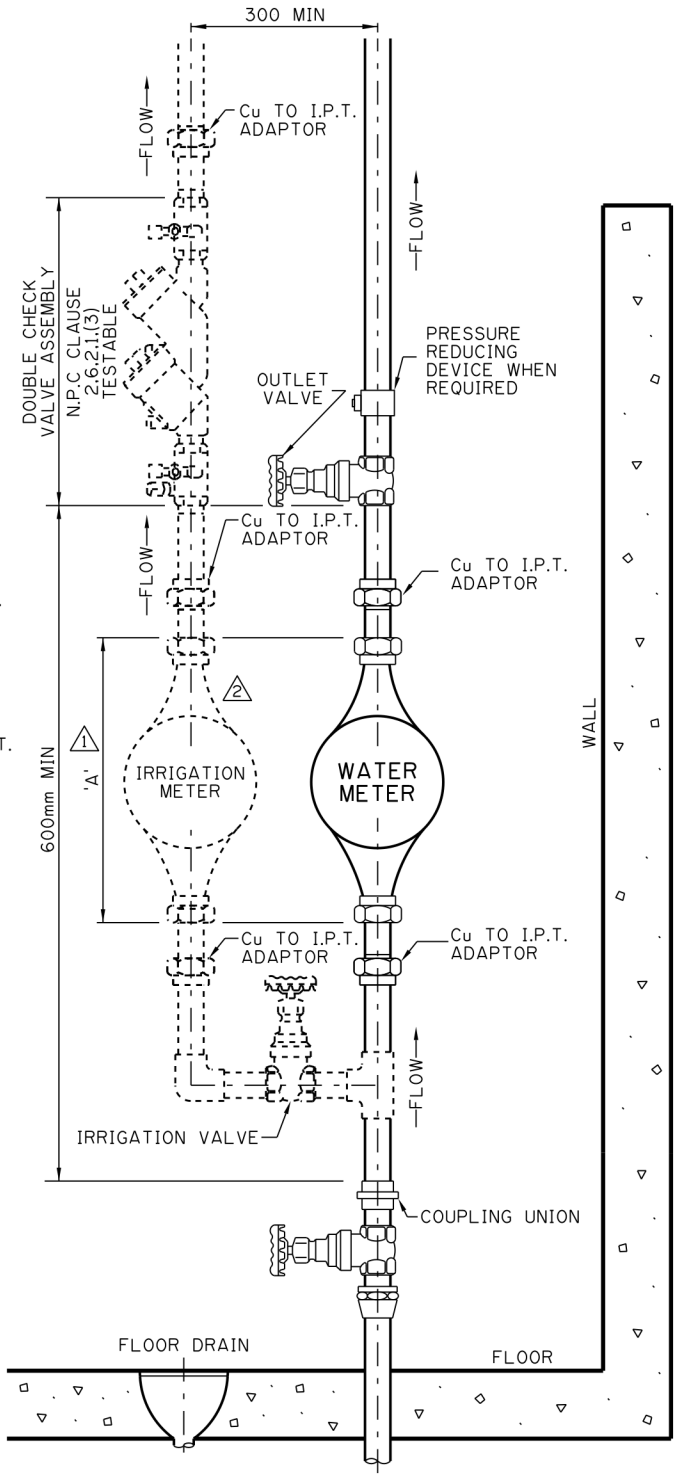

2

IRRIGATION METER (OPTIONAL)

1. IRRIGATION METER DOUBLE CHECK VALVE ASSEMBLY MUST BE TESTED BY CITY OF CALGARY REGISTERED CROSS CONNECTION TESTER. TEST ANNUALLY PRIOR TO SYSTEM USE.
2. OPTIONAL IRRIGATION METER INSTALL REQUIRES ANNUAL CCC TESTING, ADDITIONAL METER SERVICE FEES AND IRRIGATION WATER RATE ADJUSTMENT.

METER SETTING REQUIREMENTS

PROVIDE 300mm WORKING CLEARANCE IN FRONT OF AND ON BOTH SIDES OF THE METER TO PERMIT INSTALLATION AND SERVICING. TOP OF HIGHEST METER TO BE MAXIMUM OF 1.6m FROM FLOOR.

2

DIMENSIONS ARE IN MILLIMETRES UNLESS OTHERWISE NOTED

No.	Date	Revision	App'd
2	2018/04/30	REMOVED NOTES & ADDED IRRIGATION METER NOTES & DIAGRAM	B.N.
1	2017/03/06	REVISED TABLE, NOTE AND DIMENSION	B.N.

Date: 2017/02/07
Scale: N.T.S.
Approved by: for The City of Calgary

WATERWORKS CONSTRUCTION

TYPICAL METER INSTALLATION
15mm, 20mm & 25mm
C/W IRRIGATION METER (OPT)

Sheet: 29A
File Number: 453.2000.001

ISC: Unrestricted

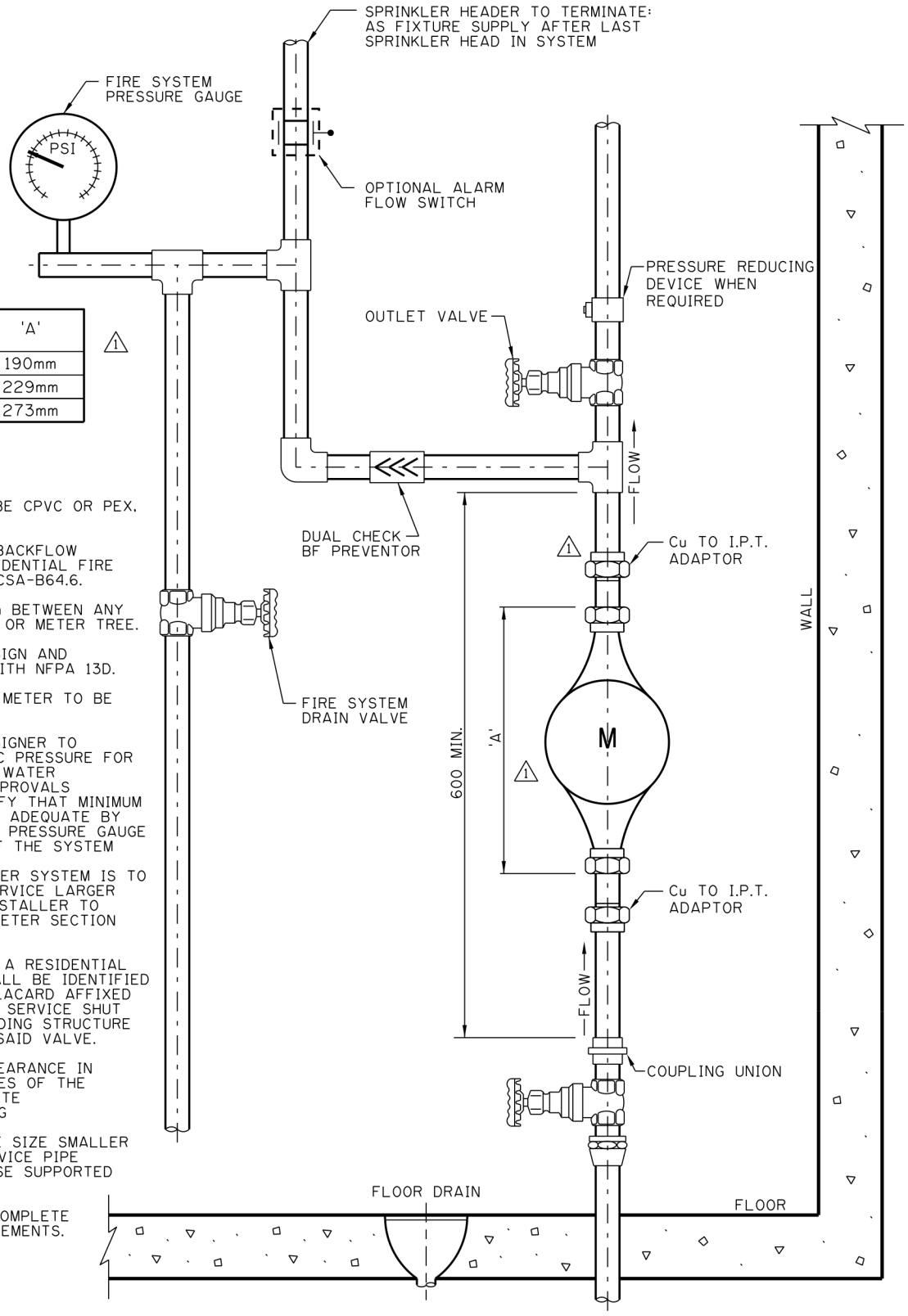

METER SPACER LENGTH	'A'
15mm - (5/8")	190mm
20mm - (3/4")	229mm
25mm - (1")	273mm

1

NOTES:

1. FIRE SPRINKLER PIPING TO BE CPVC OR PEX, UL/FM AND NSF61 LISTED.
2. DUAL CHECK VALVE, TO BE BACKFLOW PREVENTOR LISTED FOR RESIDENTIAL FIRE SPRINKLER SYSTEM USE TO CSA-B64.6.
3. MINIMUM DISTANCE OF 300mm BETWEEN ANY WALL OR FLOOR AND METER OR METER TREE.
4. FIRE SPRINKLER SYSTEM DESIGN AND INSTALLATION TO COMPLY WITH NFPA 13D.
5. WATER SERVICE AND WATER METER TO BE MINIMUM 25mm.
6. FIRE SPRINKLER SYSTEM DESIGNER TO CONFIRM WATER MAIN STATIC PRESSURE FOR DESIGN USE BY CONTACTING WATER RESOURCES DEVELOPMENT APPROVALS VIA 311. INSTALLER TO VERIFY THAT MINIMUM DESIGN SUPPLY PRESSURE IS ADEQUATE BY INSPECTION OF FIRE SYSTEM PRESSURE GAUGE FOLLOWING INSTALLATION OF THE SYSTEM
7. WHERE RESIDENTIAL SPRINKLER SYSTEM IS TO BE INSTALLED ON WATER SERVICE LARGER THAN 25mm, FIRE SYSTEM INSTALLER TO CONTACT WATER SERVICES METER SECTION VIA 311 FOR METER INFO.
8. WATER SERVICES SUPPLYING A RESIDENTIAL FIRE SPRINKLER SYSTEM SHALL BE IDENTIFIED BY A PERMANENT TAG OR PLACARD AFFIXED EITHER TO THE MAIN WATER SERVICE SHUT OFF VALVE OR TO THE BUILDING STRUCTURE IMMEDIATELY ADJACENT TO SAID VALVE.
9. PROVIDE 300mm WORKING CLEARANCE IN FRONT OF AND ON BOTH SIDES OF THE METER SETTING TO FACILITATE INSTALLATION AND SERVICING
10. METERS ARE SIZED ONE PIPE SIZE SMALLER THAN THE DIAMETER OF SERVICE PIPE INSTALLED UNLESS OTHERWISE SUPPORTED BY DESIGN CALCULATIONS.
11. REFER TO SHEET 29A FOR COMPLETE METER INSTALLATION REQUIREMENTS.

VERTICAL SETTING

DIMENSIONS ARE IN MILLIMETRES UNLESS OTHERWISE NOTED

No.	Date	Revision	App'd
1	2017/03/10	REVISED TABLE, NOTE, TITLE BLOCK, DIM. AND MODIFIED DETAIL	B.N.

Date 2017/02/08
Scale N.T.S.
Approved by for The City of Calgary

THE CITY OF CALGARY WATERWORKS CONSTRUCTION

TYPICAL RESIDENTIAL FIRE SPRINKLER CONNECTION
1 15mm, 20mm & 25mm

Sheet 29B
File Number 453.2001.001

ISC: Unrestricted

METER SPACER LENGTH	'A'
15mm - (5/8")	190mm
20mm - (3/4")	229mm
25mm - (1")	273mm

NOTES:

1. PIPING ON EACH SIDE OF METER MUST BE ADEQUATELY SUPPORTED TO THE SATISFACTION OF THE WATERWORKS
2. PIPING FOR METER MUST BE ON A VERTICAL PLANE.
3. MINIMUM DISTANCE OF 300mm BETWEEN ANY WALL OR FLOOR AND A METER OR METER TREE.
4. VALVES ARE REQUIRED ADJACENT TO METERS (INLET AND OUTLET SIDE). OUTLET VALVE NOT REQUIRED IF CROSS CONNECTION CONTROL DEVICE C/W VALVES IS INSTALLED WITHIN 1m OF METER.
5. THE AREA FOR 600mm IN FRONT OF THE METER SHALL BE FREE OF OBSTRUCTION TO ALLOW FOR CONVENIENT READING AND SERVICING OF THE METER. 2 METER HEADROOM MUST BE PROVIDED IN THIS AREA.
6. METERS MUST BE INSTALLED IN THE MECHANICAL ROOM AND WITHIN REASONABLE DISTANCE OF A FLOOR DRAIN. IN NO CASE SHALL A METER BE INSTALLED IN A BATHROOM, BEDROOM, CRAWL SPACE, GARAGE OR UNDER A STAIRWELL. METER LOCATIONS MUST BE APPROVED BY WATERWORKS.
7. METER SPACERS WILL BE SUPPLIED BY CITY OF CALGARY (FOR USE WITHIN CITY LIMITS ONLY) PHONE 268-4020.
8. ALL FITTINGS AND PIPE ARE TO BE BRASS, SOLDERED COPPER, PEX, OR APPROVED ALTERNATE, EXCEPT WHERE NOTED.
9. WHERE SOLDERED VALVES ARE BEING USED, COPPER TO FEMALE I.P.T. ADAPTERS MUST BE SUPPLIED TO ACCOMMODATE METER TAILPIECES.
10. SERVICE VALVES, MAIN VALVES OR ANY OTHER CITY OWNED WATERWORKS APPURTENANCES SHALL BE OPERATED BY WATERWORKS PERSONNEL ONLY.
11. THE MASTER CONTROL AND OUTLET VALVES SHALL BE FULL PORT GATE VALVES OR BALL VALVES AND SHALL CONFORM TO THE NATIONAL PLUMBING CODE OF CANADA (FOR INQUIRIES CALL 311 TO CONTACT THE PLUMBING & GAS SAFETY CODES OFFICER).
12. AN APPROVED CROSS CONNECTION CONTROL DEVICE SHALL BE INSTALLED ON ALL COMMERCIAL, INDUSTRIAL AND MULTI FAMILY RESIDENTIAL (3 UNITS OR MORE) SERVICES. FOR INQUIRIES CALL 311 TO CONTACT CROSS CONNECTION CONTROL.
13. AN APPROVED PREMISES-ISOLATING CROSS CONNECTION CONTROL DEVICE SHALL BE INSTALLED IMMEDIATELY AFTER THE WATER METER OUTLET VALVE ON ALL IRRIGATION SERVICES.
14. WATER CONNECTIONS (IE. DRAIN DOWN VALVE OR HOSE BIBB ETC.) SHALL NOT BE PERMITTED BEFORE THE APPROVED CROSS CONNECTION CONTROL DEVICE. FOR INQUIRY CALL 311.
15. METERS ARE SIZED ONE PIPE SIZE SMALLER THAN THE DIAMETER OF SERVICE PIPE INSTALLED UNLESS OTHERWISE SUPPORTED BY DESIGN CALCULATIONS.

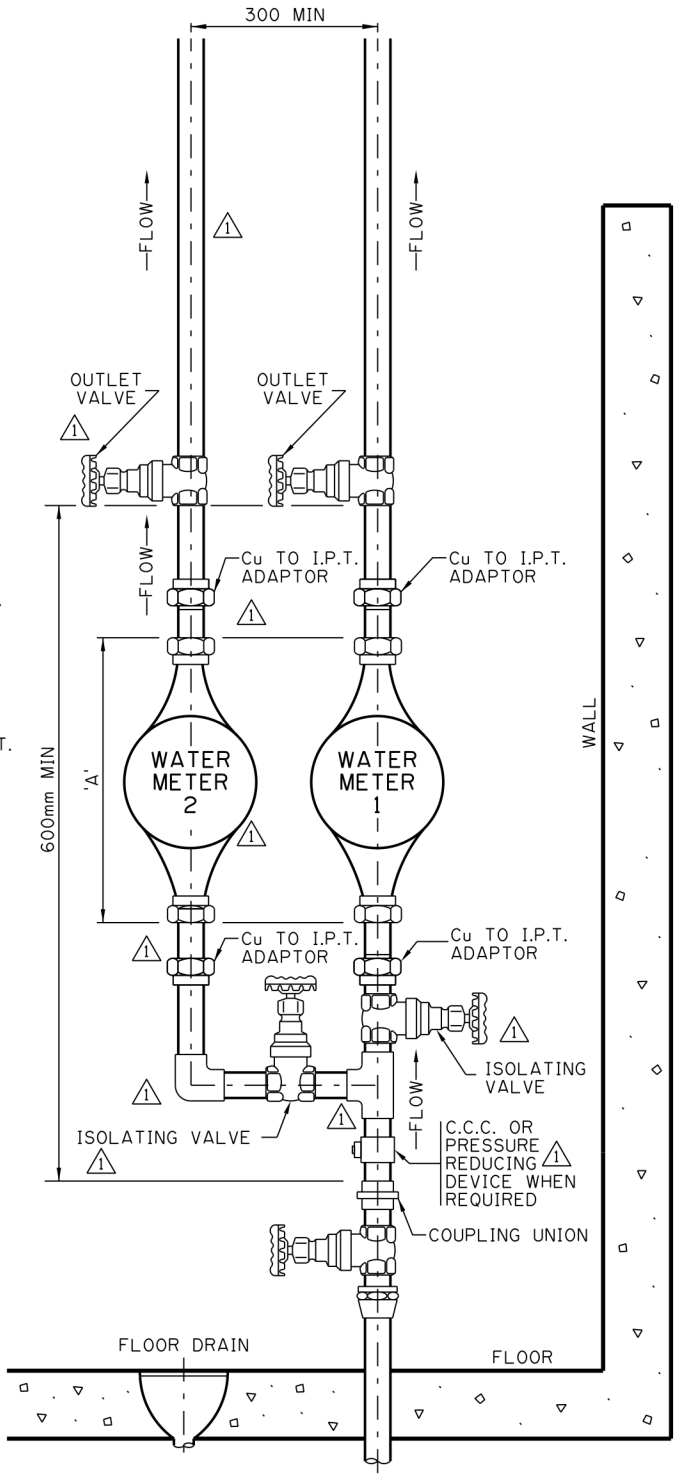

METER SETTING REQUIREMENTS

PROVIDE 300mm WORKING CLEARANCE IN FRONT OF AND ON BOTH SIDES OF THE METER TO PERMIT INSTALLATION AND SERVICING. TOP OF HIGHEST METER TO BE MAXIMUM OF 1.6m FROM FLOOR.

DIMENSIONS ARE IN MILLIMETRES UNLESS OTHERWISE NOTED

No.	Date	Revision	App'd
1	2019/09/07	REMOVED NOTES & REVISED DIAGRAM BASED ON 29A	B.N.

Date: 2019/09/07
Scale: N.T.S.
Approved by: for The City of Calgary

WATERWORKS CONSTRUCTION

TYPICAL METER INSTALLATION
15mm, 20mm & 25mm
LANEWAY/GARDEN/RESIDENTIAL
SUITE METER DETAIL

Sheet: 29C
File Number: 453.2004.001

ISC: Unrestricted

METER SPACER LENGTH	'A'
15mm - (5/8")	190mm
20mm - (3/4")	229mm
25mm - (1")	273mm

METER SETTING REQUIREMENTS

PROVIDE 300mm WORKING CLEARANCE IN FRONT OF AND ON BOTH SIDES OF THE METER TO PERMIT INSTALLATION AND SERVICING. TOP OF HIGHEST METER TO BE MAXIMUM OF 1.6m FROM FLOOR.

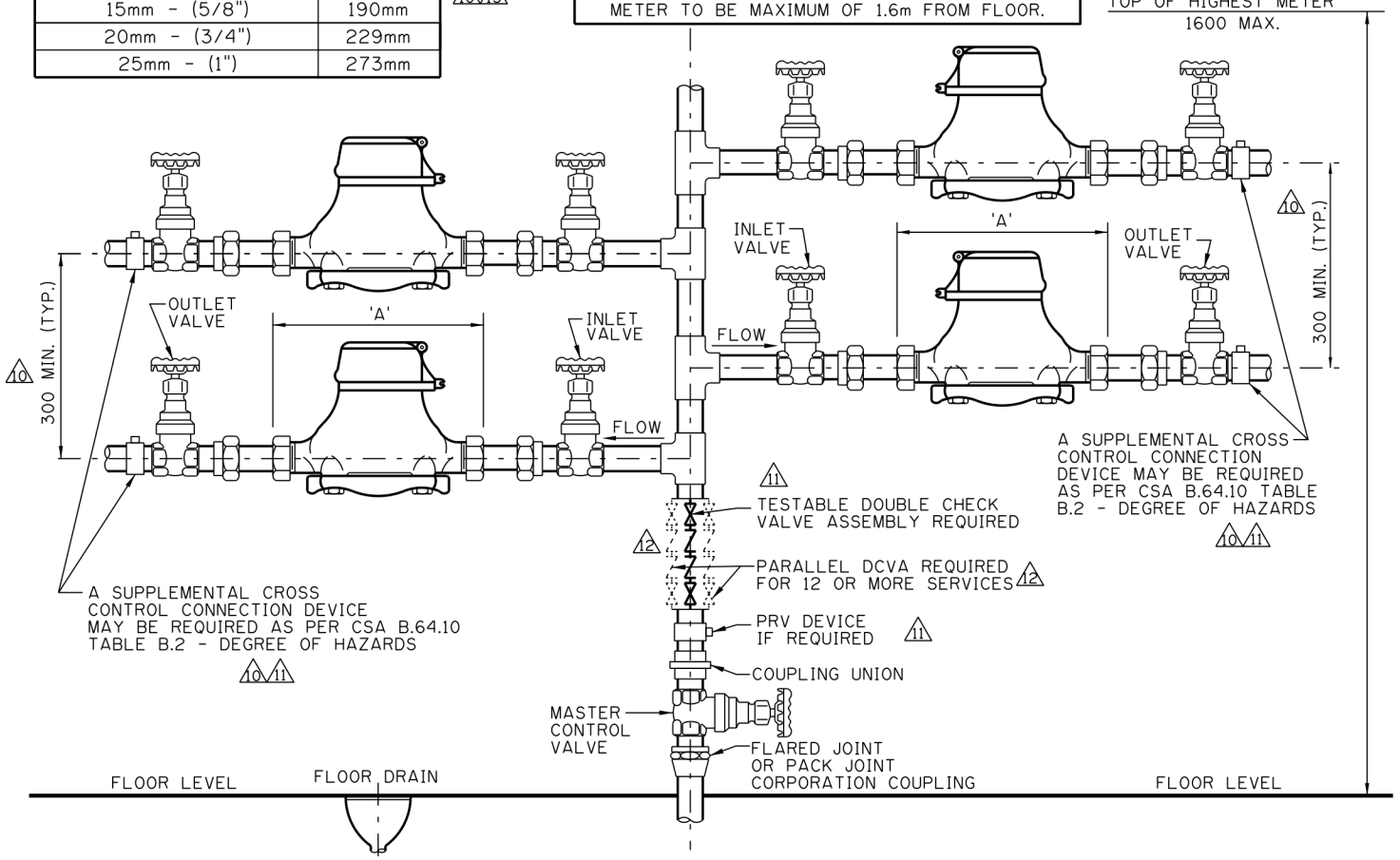

NOTES:

1. PIPING ON EACH SIDE OF METER MUST BE ADEQUATELY SUPPORTED TO THE SATISFACTION OF THE WATERWORKS METER SECTION.
2. PIPING FOR METER MUST BE ON A HORIZONTAL PLANE.
10. 3. MINIMUM DISTANCE OF 300mm BETWEEN ANY WALL OR FLOOR AND A METER OR METER TREE.
4. VALVES ARE REQUIRED ADJACENT TO METERS (INLET AND OUTLET SIDE).
5. ALTERNATE ARRANGEMENT OF PIPING AND VALVING MUST HAVE THE APPROVAL OF THE WATERWORKS METER SECTION PRIOR TO INSTALLATION.
6. THE AREA FOR 600mm IN FRONT OF THE METER SHALL BE FREE OF OBSTRUCTION TO ALLOW FOR CONVENIENT READING AND SERVICING OF THE METER. 2 METER HEADROOM MUST BE PROVIDED IN THIS AREA.
7. METERS MUST BE INSTALLED IN THE MECHANICAL ROOM AND WITHIN REASONABLE DISTANCE OF A FLOOR DRAIN. IN NO CASE SHALL A METER BE INSTALLED IN A BATHROOM, BEDROOM, CRAWL SPACE, GARAGE OR UNDER A STAIRWELL. METER LOCATIONS MUST BE APPROVED BY WATERWORKS.
8. METER SPACERS TO BE SUPPLIED BY CITY OF CALGARY (FOR USE WITHIN CITY LIMITS ONLY) PHONE 311.
9. 9. ALL FITTINGS AND PIPE ARE TO BE BRASS, SOLDERED COPPER, PEX, OR APPROVED ALTERNATE, EXCEPT WHERE NOTED.
10. SERVICE VALVES, MAIN VALVES OR ANY OTHER CITY OWNED WATERWORKS APPURTENANCES SHALL BE OPERATED BY WATER SERVICES PERSONNEL ONLY.
11. THE MASTER CONTROL VALVE AND THE INLET AND OUTLET VALVE FOR EACH METER SETTING SHALL BE A FULL PORT GATE VALVE OR BALL VALVE AND SHALL CONFORM TO THE NATIONAL PLUMBING CODE OF CANADA (FOR INQUIRIES CALL 311 TO CONTACT PLUMBING & GAS SAFETY CODES OFFICER).
11. 12. AN APPROVED PREMISES ISOLATING CROSS CONNECTION CONTROL DEVICE SHALL BE INSTALLED IMMEDIATELY AFTER THE WATER METER OUTLET VALVE ON ALL COMMERCIAL, INDUSTRIAL AND MULTI FAMILY RESIDENTIAL (3 UNITS OR MORE) SERVICES. SEE SKETCH FOR ALTERNATE LOCATION. FOR INQUIRY CALL 311. SEE SHEET 30B FOR PARALLEL BACKFLOW DEVICE REQUIREMENTS.
13. AN APPROVED PREMISES-ISOLATING CROSS CONNECTION CONTROL DEVICE SHALL BE INSTALLED IMMEDIATELY AFTER THE WATER METER OUTLET VALUE ON ALL IRRIGATION SERVICES.
14. WATER CONNECTIONS (IE. DRAIN DOWN VALVE OR HOSE BIBB ETC.) SHALL NOT BE PERMITTED BEFORE THE APPROVED CROSS CONNECTION CONTROL DEVICE. FOR INQUIRY CALL 311.
9. 15. METERS ARE SIZED ONE PIPE SIZE SMALLER THAN THE DIAMETER OF SERVICE PIPE INSTALLED UNLESS OTHERWISE SUPPORTED BY DESIGN CALCULATIONS.

DIMENSIONS ARE IN MILLIMETRES UNLESS OTHERWISE NOTED

No.	Date	Revision	App'd
14	2018/04/10	METER SETTING REQUIREMENT NOTE ADDED	B.N.
13	2017/12/27	ADDED ROW TO TABLE, EDIT TITLE	B.N.
12	2017/05/31	ADDED DOUBLE CHECK VALVE ASSEMBLY AND NOTES	B.N.
11	2017/05/08	REVISED NOTES	B.N.
10	2017/03/09	REVISED TABLE, NOTE AND DIMENSIONS	B.N.
9	2017/02/07	REVISED NOTES	B.N.

Date 1995/12/06
Scale N.T.S.
Approved by for The City of Calgary

WATERWORKS CONSTRUCTION

TYPICAL COMMERCIAL BANK METERING SIZE
13 15mm, 20mm & 25mm

Sheet 30
File Number 453.1009.007

ISC: Unrestricted

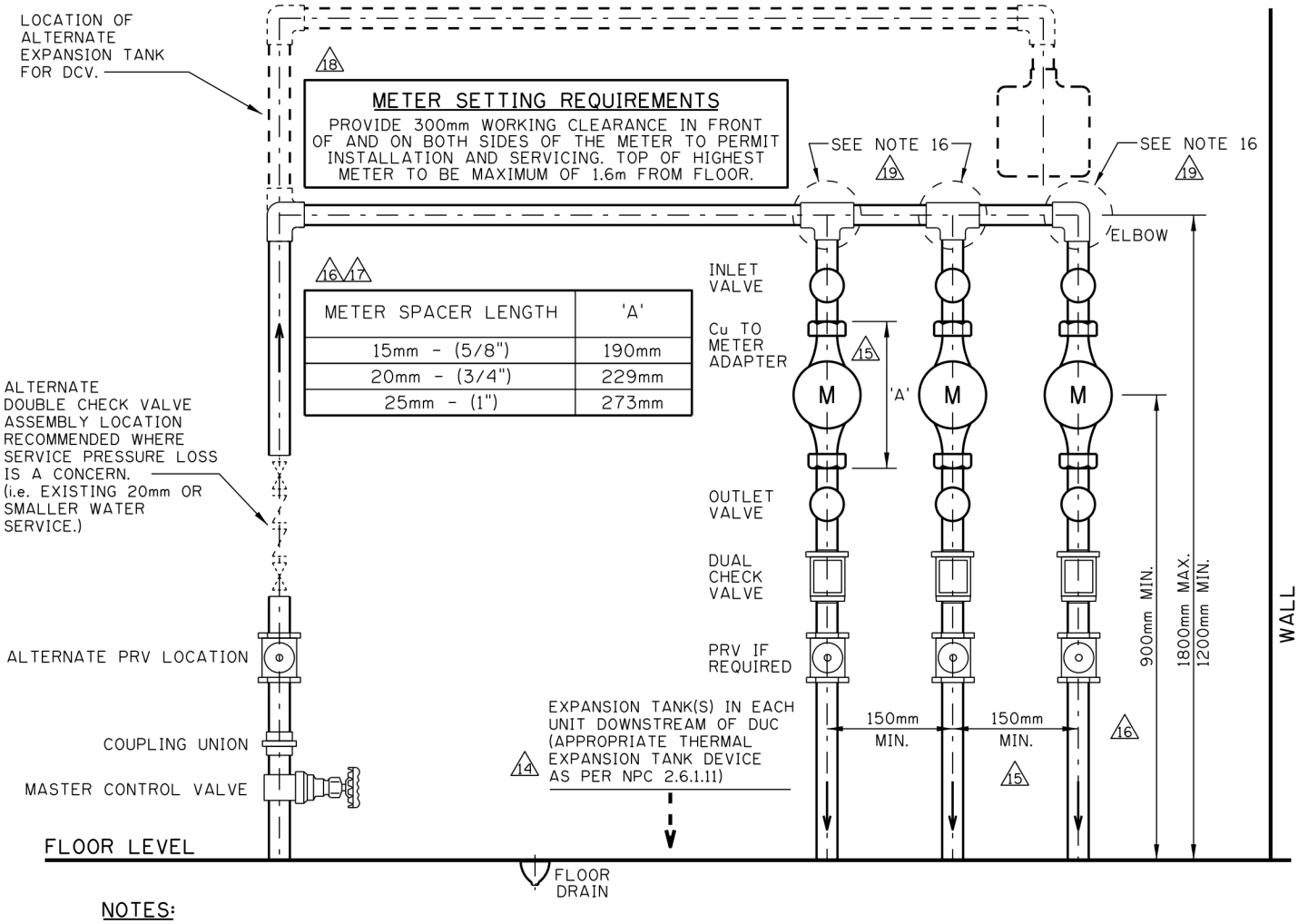

NOTES:

1. PIPING MUST BE ADEQUATELY SUPPORTED TO THE SATISFACTION OF THE WATERWORKS METER SECTION.
2. ALL METERS LARGER THAN 25mm (1") MUST BE HORIZONTAL AND A MINIMUM OF 300mm FROM WALL.
16. MINIMUM DISTANCE OF 300mm BETWEEN ANY WALL OR FLOOR AND A METER OR METER TREE.
4. VALVES ARE REQUIRED ADJACENT TO METERS (INLET AND OUTLET SIDE).
5. ALTERNATE ARRANGEMENT OF PIPING AND VALVING MUST HAVE THE APPROVAL OF THE WATERWORKS METER SECTION PRIOR TO INSTALLATION.
6. THE AREA FOR 600mm IN FRONT OF THE METER SHALL BE FREE OF OBSTRUCTION TO ALLOW FOR CONVENIENT READING AND SERVICING OF THE METER. 2 METER HEADROOM MUST BE PROVIDED IN THIS AREA.
7. METERS MUST BE INSTALLED IN THE MECHANICAL ROOM AND WITHIN REASONABLE DISTANCE OF A FLOOR DRAIN. IN NO CASE SHALL A METER BE INSTALLED IN A BATHROOM, BEDROOM, CRAWL SPACE, GARAGE OR UNDER A STAIRWELL. METER LOCATIONS MUST BE APPROVED BY WATERWORKS.
8. METER SPACERS WILL BE SUPPLIED BY CITY OF CALGARY (FOR USE WITHIN CITY LIMITS ONLY) PHONE 311.
15. ALL FITTINGS AND PIPE ARE TO BE BRASS, SOLDERED COPPER, PEX OR APPROVED ALTERNATE, EXCEPT WHERE NOTED.
10. SERVICE VALVES, MAIN VALVES OR ANY OTHER CITY OWNED WATERWORKS APPURTENANCES SHALL BE OPERATED BY WATER SERVICES PERSONNEL ONLY.
11. THE MASTER CONTROL VALVE AND THE INLET AND OUTLET VALVE FOR EACH METER SETTING SHALL BE A FULL PORT GATE VALVE OR BALL VALVE AND SHALL CONFORM TO THE NATIONAL PLUMBING CODE OF CANADA (FOR INQUIRIES CALL 311 TO CONTACT PLUMBING & GAS SAFETY CODES OFFICER).
14. APPROVED PREMISES-ISOLATING DUAL CHECK VALVE (DUC) SHALL BE INSTALLED IMMEDIATELY AFTER THE WATER METER OUTLET VALVE ON ALL MULTI FAMILY RESIDENTIAL SERVICES (3 UNITS OR LESS). SEE SKETCH FOR ALTERNATE LOCATION. FOR INQUIRY CALL 311.
13. AN APPROVED PREMISES-ISOLATING CROSS CONNECTION CONTROL DEVICE SHALL BE INSTALLED IMMEDIATELY AFTER THE WATER METER OUTLET VALUE ON ALL IRRIGATION SERVICES.
14. WATER CONNECTIONS (IE. DRAIN DOWN VALVE OR HOSE BIBB ETC.) SHALL NOT BE PERMITTED BEFORE THE APPROVED CROSS CONNECTION CONTROL DEVICE. FOR INQUIRY CALL 311.
15. METERS ARE SIZED ONE PIPE SIZE SMALLER THAN THE DIAMETER OF SERVICE PIPE INSTALLED UNLESS OTHERWISE SUPPORTED BY DESIGN CALCULATIONS.
19. METER RUN TAKE-OFFS SOLDERED COPPER OR IPT BRASS FITTINGS ONLY.

DIMENSIONS ARE IN MILLIMETRES UNLESS OTHERWISE NOTED

No.	Date	Revision	App'd
19	2019/08/27	METER SETTING REQUIREMENT NOTE ADDED	B.N.
18	2018/04/10	METER SETTING REQUIREMENT NOTE ADDED	B.N.
17	2017/12/27	ADDED ROW TO TABLE AND REVISED TITLE	B.N.
16	2017/03/09	REVISED TABLE, NOTE AND REMOVED 100mm DIMENSION	B.N.
15	2017/02/07	ADDED DIMENSIONS & REVISED NOTES	B.N.
14	2015/12/16	REVISED NOTES	B.N.

Date 2002/10/16
Scale N.T.S.
Approved by for The City of Calgary

WATERWORKS CONSTRUCTION

FOR 3 OR LESS SERVICES
TYPICAL RESIDENTIAL
17 BANK METERING
SIZE 15mm, 20mm & 25mm

Sheet 30A
File Number 453.1009.007pt1

ISC: Unrestricted

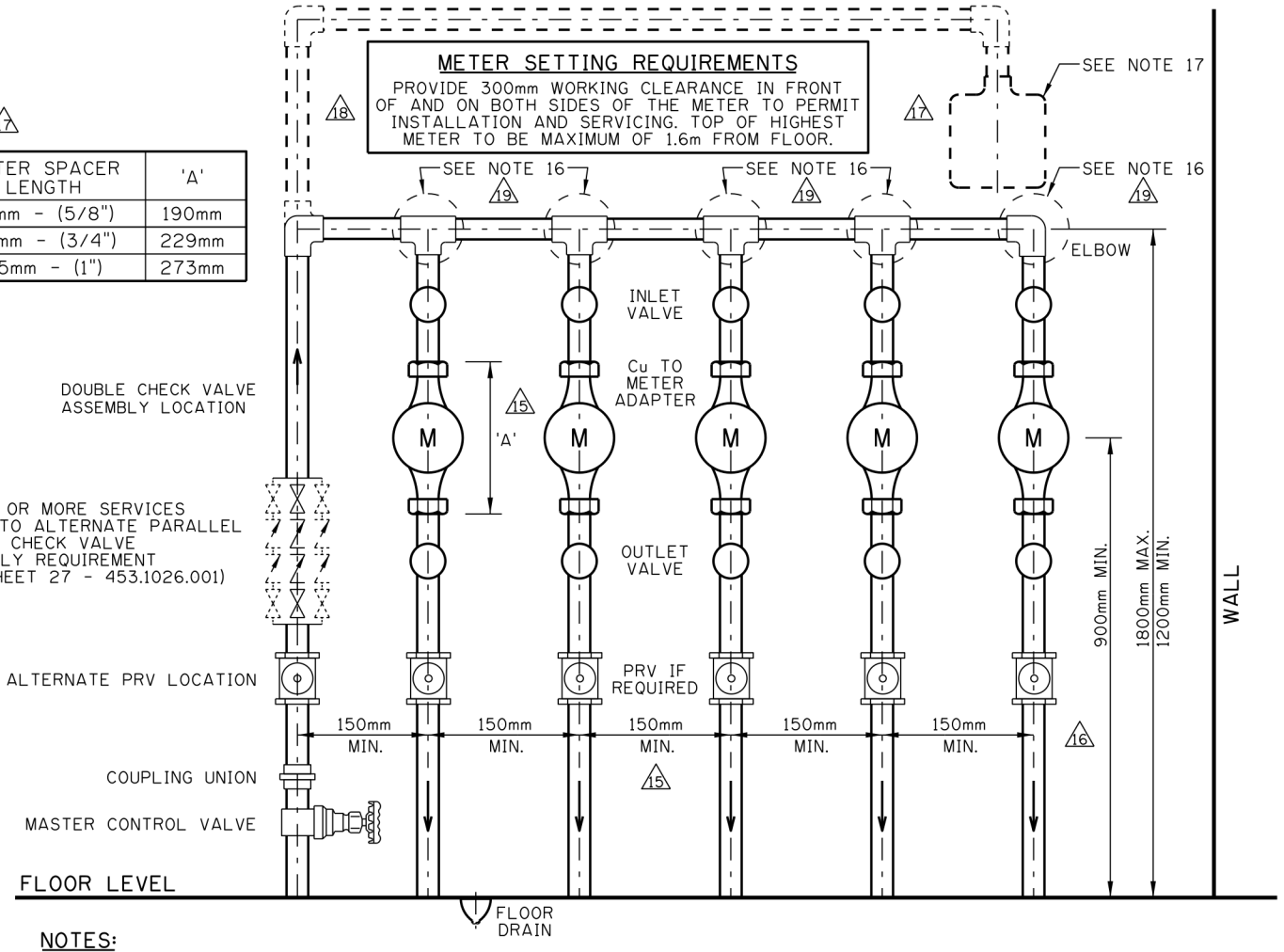

METER SPACER LENGTH	'A'
15mm - (5/8")	190mm
20mm - (3/4")	229mm
25mm - (1")	273mm

NOTES:

1. PIPING MUST BE ADEQUATELY SUPPORTED TO THE SATISFACTION OF THE WATERWORKS METER SECTION.
2. ALL METERS LARGER THAN 25mm (1") MUST BE HORIZONTAL AND A MINIMUM OF 300mm FROM WALL.
3. MINIMUM DISTANCE OF 300mm BETWEEN ANY WALL OR FLOOR AND A METER OR METER TREE.
4. VALVES ARE REQUIRED ADJACENT TO METERS (INLET AND OUTLET SIDE).
5. ALTERNATE ARRANGEMENT OF PIPING AND VALVING MUST HAVE THE APPROVAL OF THE WATERWORKS METER SECTION PRIOR TO INSTALLATION.
6. THE AREA FOR 600mm IN FRONT OF THE METER SHALL BE FREE OF OBSTRUCTION TO ALLOW FOR CONVENIENT READING AND SERVICING OF THE METER. 2.0m HEADROOM MUST BE PROVIDED IN THIS AREA.
7. METERS MUST BE INSTALLED IN THE MECHANICAL ROOM AND WITHIN REASONABLE DISTANCE OF A FLOOR DRAIN. IN NO CASE SHALL A METER BE INSTALLED IN A BATHROOM, BEDROOM, CRAWL SPACE, GARAGE OR UNDER A STAIRWELL. METER LOCATIONS MUST BE APPROVED BY WATERWORKS.
8. METER SPACERS WILL BE SUPPLIED BY CITY OF CALGARY (FOR USE WITHIN CITY LIMITS ONLY) PHONE 311.
9. ALL FITTINGS AND PIPE ARE TO BE BRASS, SOLDERED COPPER, PEX OR APPROVED ALTERNATE, EXCEPT WHERE NOTED.
10. SERVICE VALVES, MAIN VALVES OR ANY OTHER CITY OWNED WATERWORKS APPURTENANCES SHALL BE OPERATED BY WATER SERVICES PERSONNEL ONLY.
11. THE MASTER CONTROL VALVE AND THE INLET AND OUTLET VALVE FOR EACH METER SETTING SHALL BE A FULL PORT GATE VALVE OR BALL VALVE AND SHALL CONFORM TO THE NATIONAL PLUMBING CODE OF CANADA (FOR INQUIRIES CALL 311 TO CONTACT PLUMBING & GAS SAFETY CODES OFFICER).
12. AN APPROVED PREMISES-ISOLATING CROSS CONNECTION CONTROL DEVICE SHALL BE INSTALLED IMMEDIATELY AFTER THE WATER METER OUTLET VALVE ON ALL MULTI FAMILY RESIDENTIAL SERVICES (4 UNITS OR MORE). SEE SKETCH FOR ALTERNATE LOCATION. FOR INQUIRY CALL 311.
13. AN APPROVED PREMISES-ISOLATING CROSS CONNECTION CONTROL DEVICE SHALL BE INSTALLED IMMEDIATELY AFTER THE WATER METER OUTLET VALUE ON ALL IRRIGATION SERVICES.
14. WATER CONNECTIONS (IE. DRAIN DOWN VALVE OR HOSE BIBB ETC.) SHALL NOT BE PERMITTED BEFORE THE APPROVED CROSS CONNECTION CONTROL DEVICE. FOR INQUIRY CALL 311.
15. METERS ARE SIZED ONE PIPE SIZE SMALLER THAN THE DIAMETER OF SERVICE PIPE INSTALLED UNLESS OTHERWISE SUPPORTED BY DESIGN CALCULATIONS.
16. METER RUN TAKE-OFFS SOLDERED COPPER OR IPT BRASS FITTINGS ONLY.
17. EXPANSION TANK (APPROPRIATE THERMAL EXPANSION TANK DEVICE AS PER NPC 2.6.1.11)

DIMENSIONS ARE IN MILLIMETRES UNLESS OTHERWISE NOTED

No.	Date	Revision	App'd
19	2019/08/28	METER SETTING REQUIREMENT NOTE ADDED	B.N.
18	2018/04/10	METER SETTING REQUIREMENT NOTE ADDED	B.N.
17	2017/12/27	REVISED TABLE AND TITLE BLOCK, MODIFIED DETAIL	B.N.
16	2017/03/10	REVISED TABLE, NOTE AND REMOVED 100mm DIMENSION	B.N.
15	2017/02/07	ADDED DIMENSIONS & REVISED NOTES	B.N.
14	2015/12/16	REVISED TITLE BLOCK	B.N.

Date 2002/10/16
Scale N.T.S.
Approved by for The City of Calgary

WATERWORKS CONSTRUCTION

FOR 4 OR MORE SERVICES TYPICAL RESIDENTIAL BANK METERING SIZE 15mm, 20mm & 25mm

Sheet 30B
File Number 453.1009.007pt2

ISC: Unrestricted

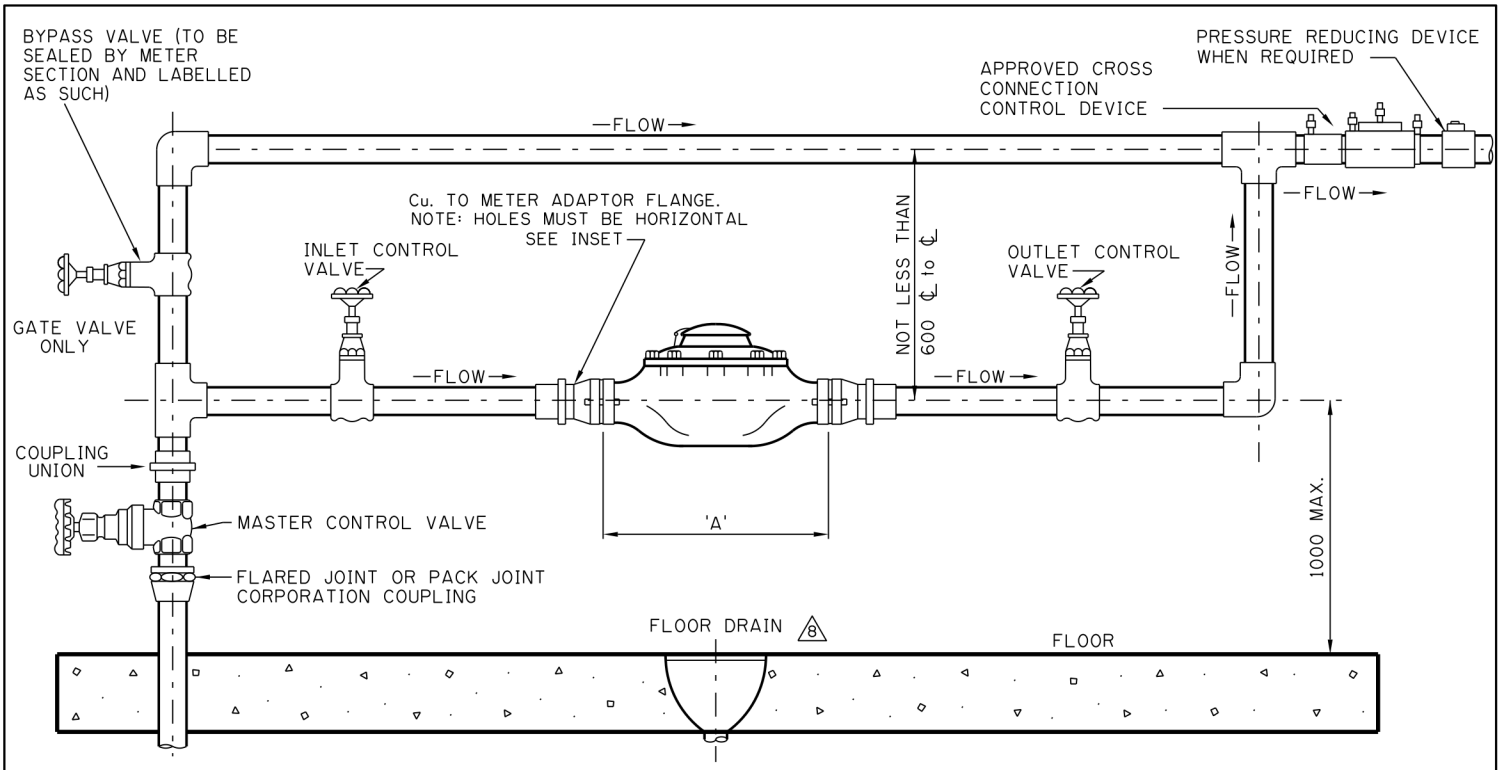

METER SPACER LENGTH	'A'
25mm - (1")	273mm
40mm - (1-5/8")	330mm
50mm - (2")	432mm

10

METER SETTING REQUIREMENTS

11 PROVIDE 300mm WORKING CLEARANCE IN FRONT OF AND ON BOTH SIDES OF THE METER TO PERMIT INSTALLATION AND SERVICING. TOP OF HIGHEST METER TO BE MAXIMUM OF 1.6m FROM FLOOR.

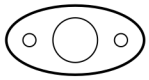

Cu. TO METER ADAPTOR FLANGE

INSET

N.T.S.

NOTES:

1. PIPING ON EACH SIDE OF METER MUST BE ADEQUATELY SUPPORTED TO THE SATISFACTION OF THE WATERWORKS METER SECTION.
2. PIPING FOR METER MUST BE ON A HORIZONTAL PLANE.
10 3. MINIMUM DISTANCE OF 300mm BETWEEN ANY WALL OR FLOOR AND A METER OR METER TREE.
4. VALVES ARE REQUIRED ADJACENT TO METERS (INLET AND OUTLET SIDE).
5. ALTERNATE ARRANGEMENT OF PIPING AND VALVING MUST HAVE THE APPROVAL OF THE WATERWORKS METER SECTION PRIOR TO INSTALLATION.
6. THE AREA FOR 600mm IN FRONT OF THE METER SHALL BE FREE OF OBSTRUCTION TO ALLOW FOR CONVENIENT READING AND SERVICING OF THE METER. 2 METER HEADROOM MUST BE PROVIDED IN THIS AREA.
7. METERS MUST BE INSTALLED IN THE MECHANICAL ROOM AND WITHIN REASONABLE DISTANCE OF A FLOOR DRAIN. IN NO CASE SHALL A METER BE INSTALLED IN A BATHROOM, BEDROOM, CRAWL SPACE, GARAGE OR UNDER A STAIRWELL. METER LOCATIONS MUST BE APPROVED BY WATERWORKS.
8. METER SPACERS TO BE SUPPLIED BY CITY OF CALGARY (FOR USE WITHIN CITY LIMITS) PHONE 311.
12 9 9. ALL FITTINGS AND PIPE ARE TO BE BRASS, SOLDERED COPPER, OR CPVC.
10. SERVICE VALVES, MAIN VALVES OR ANY OTHER CITY OWNED WATERWORKS APPURTENANCES SHALL BE OPERATED BY WATER SERVICES PERSONNEL ONLY.
*11. THE BY-PASS VALVE SHALL BE A FULL PORT GATE VALVE (A BALL VALVE IS NOT ACCEPTABLE). ALL OTHER VALVES SHALL BE FULL PORT GATE OR BALL VALVES.
12. AN APPROVED PREMISE ISOLATING CROSS CONNECTION DEVICE SHALL BE INSTALLED IMMEDIATELY AFTER THE WATER METER SETTING ON ALL COMMERCIAL, INDUSTRIAL AND MULTI FAMILY RESIDENTIAL (3 UNITS OR MORE) SERVICES.

   FOR DOMESTIC SERVICES THAT REQUIRE A 24 HOUR UNINTERRUPTED WATER SUPPLY, A PARALLEL CROSS CONNECTION CONTROL DEVICE ARRANGEMENT (SEE SHEET No. 27) MUST BE INSTALLED TO FACILITATE ANNUAL TESTING & ROUTINE MAINTENANCE OF THE CROSS CONNECTION CONTROL DEVICE(S).
13. A BYPASS LINE THE SAME SIZE AS THE MAIN PIPE IS REQUIRED. BYPASS IS NOT REQUIRED FOR IRRIGATION METERS
7 14. WATER CONNECTIONS (IE. DRAIN DOWN VALVE OR HOSE BIBB ETC.) SHALL NOT BE PERMITTED BEFORE THE APPROVED CROSS CONNECTION CONTROL DEVICE. FOR INQUIRY CALL 311.
15. AN APPROVED PREMISES-ISOLATING CROSS CONNECTION CONTROL DEVICE SHALL BE INSTALLED IMMEDIATELY AFTER THE WATER METER OUTLET VALVE ON ALL IRRIGATION SERVICES.
9 16. METERS ARE SIZED ONE PIPE SIZE SMALLER THAN THE DIAMETER OF SERVICE PIPE INSTALLED UNLESS OTHERWISE SUPPORTED BY DESIGN CALCULATIONS.

DIMENSIONS ARE IN MILLIMETRES UNLESS OTHERWISE NOTED

No.	Date	Revision	App'd
12	2019/08/26	REVISED NOTES	B.N.
11	2018/04/30	METER SETTING REQUIREMENT NOTE ADDED	B.N.
10	2017/03/09	REVISED TABLE AND NOTE	B.N.
9	2017/02/08	REVISED NOTES	B.N.
8	2009/12/10	ADDED FLOOR DRAIN	B.N.
7	2008/10/15	REVISED NOTE No. 14	B.N.

Date 1994/12/20
Scale N.T.S.
Approved by for The City of Calgary

WATERWORKS CONSTRUCTION

TYPICAL METER INSTALLATION 40mm & 50mm

Sheet 31
File Number 453.1009.008

ISC: Unrestricted

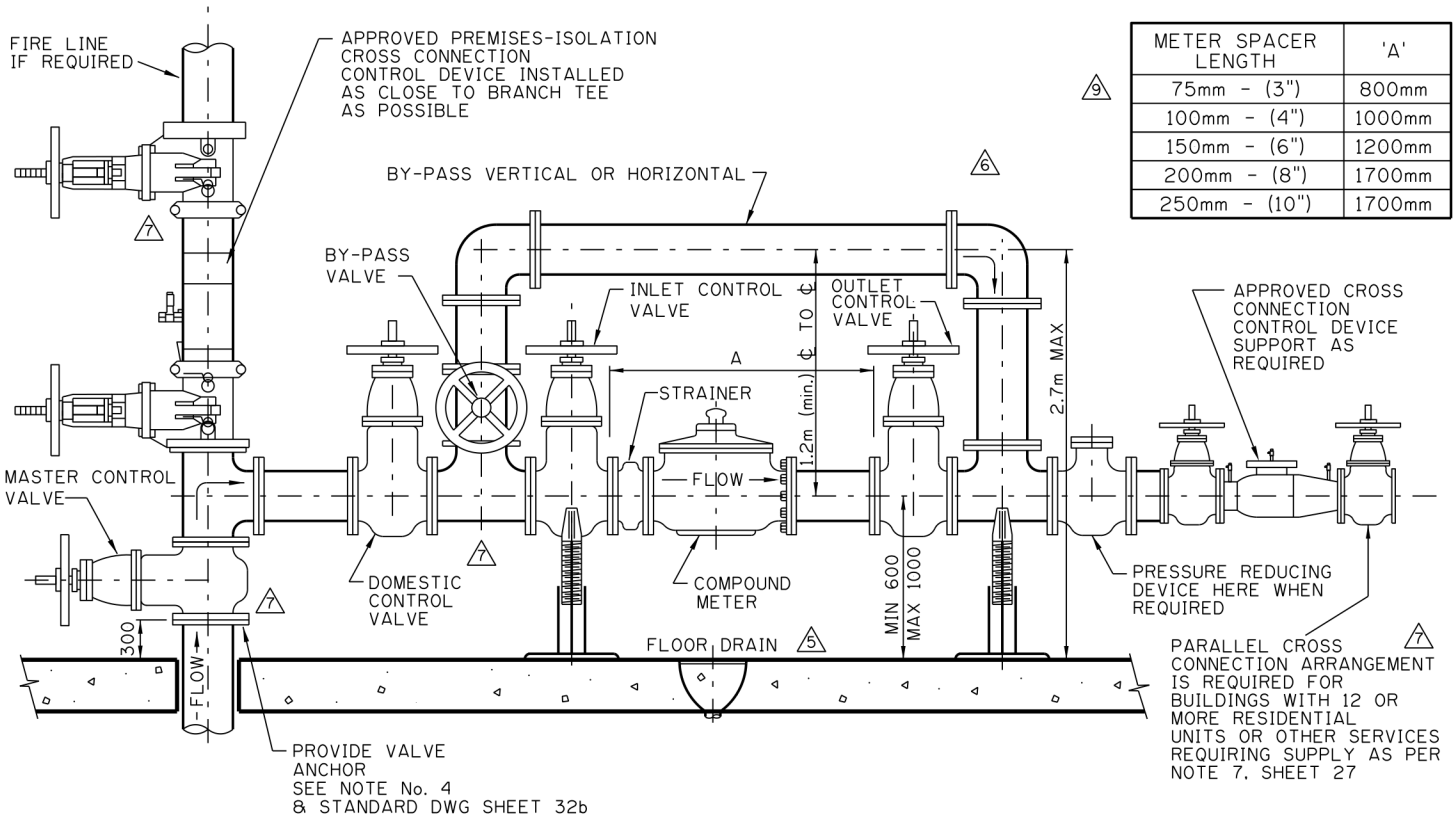

METER SPACER LENGTH	'A'
75mm - (3")	800mm
100mm - (4")	1000mm
150mm - (6")	1200mm
200mm - (8")	1700mm
250mm - (10")	1700mm

△10 **IMPORTANT NOTICE:** MASTER CONTROL VALVE MUST BEAR VALID "INSPECTION SERVICES WATER APPROVAL" TAG FOR WATER METER INSTALLATION TO PROCEED.

NOTES:

1. THE SPACE ABOVE, 600mm BEHIND, AND THE ACCESS IN FRONT OF THE METER SETTING SHALL BE CLEAR AND FREE OF OBSTRUCTION. 2m HEADROOM MUST BE PROVIDED IN THIS AREA. PROVIDE ADEQUATE PIPE SUPPORT.
2. THE BY-PASS, INLET AND OUTLET VALVES SHALL BE A RESILIENT SEATED RISING SPINDLE (OS & Y) FLANGED GATE VALVE, CSA APPROVED.
3. THE MASTER CONTROL VALVE SHALL BE ONE OF THE FOLLOWING :
   a) RESILIENT SEATED RISING SPINDLE (OS & Y) FLANGED GATE VALVE (UL OR ULC LISTED) FOR FIRE LINES AND CSA APPROVED FOR DOMESTIC LINES.
   b) SHORT-BODY, RUBBER SEATED FLANGED OR LUG WATER TYPE BUTTERFLY VALVE C/W HAND WHEEL, REDUCTION GEAR OPERATOR, POSITION INDICATOR (UL OR ULC LISTED) PROVIDED THEY ARE NOT IN A SUCTION LINE FOR FIRE PUMP(S).
4. ENTRANCE PIPE MATERIAL THROUGH THE OUTSIDE WALL AND THROUGH THE FLOOR SHALL BE DUCTILE IRON PIPE AWWA C151 (LATEST EDITION) CLASS 52 OR APPROVED EQUAL. BURIED FITTINGS (90° ELBOW) SHALL BE CAST OR DUCTILE IRON CONFORMING TO AWWA C110 (LATEST EDITION) OR APPROVED EQUAL. SERVICE ENTRIES THROUGH THE FLOOR (INCLUDING ANCHOR DETAILS) SHALL BE DESIGNED BY A PROFESSIONAL ENGINEER AND DETAILED ON THE MECHANICAL SITE PLAN. (ANCHOR RODS SHALL BE 18-8 STAINLESS STEEL, WHERE A STANDARD 3m LENGTH OF ROD REQUIRES EXTENSION, AN APPROVED STAINLESS HEXAGON NUT COUPLING SHALL BE INSTALLLED AT THE UPPER END OF THE ROD).
5. WATERWORKS WILL NOT TURN ON WATER UNLESS ANCHOR DETAILS HAVE BEEN INSPECTED BY THE WATERWORKS INSPECTOR PRIOR TO PLACEMENT OF CONCRETE AND/OR BACKFILL.
6. △8 PIPING MATERIAL FOR THE METER AND BY-PASS ASSEMBLY SHALL BE COPPER, STAINLESS STEEL OR PVC CONFORMING TO THE PLUMBING CODE.
7. AN APPROVED PREMISE ISOLATING CROSS CONNECTION DEVICE SHALL BE INSTALLED IMMEDIATELY AFTER THE WATER METER SETTING ON ALL COMMERCIAL, INDUSTRIAL AND MULTI FAMILY RESIDENTIAL (3 UNITS OR MORE) SERVICES.

   FOR DOMESTIC SERVICES THAT REQUIRE A 24 HOUR UNINTERRUPTED WATER SUPPLY, A PARALLEL CROSS CONNECTION CONTROL DEVICE ARRANGEMENT (SEE SHEET No. 27) MUST BE INSTALLED TO FACILITATE ANNUAL TESTING & ROUTINE MAINTENANCE OF THE CROSS CONNECTION CONTROL DEVICE(S).
8. BY-PASS IS NOT REQUIRED FOR IRRIGATION METERS. THE BY PASS PIPE SHALL BE THE SAME SIZE AS THE MAIN PIPE.
9. THE BY-PASS VALVE SHALL BE INSTALLED ON THE VERTICAL PIPE SECTION AS SHOWN.
10. WATER CONNECTIONS (IE. DRAIN DOWN VALVE OR HOSE BIBB ETC.) SHALL NOT BE PERMITTED BEFORE THE APPROVED CROSS CONNECTION CONTROL DEVICE. FOR INQUIRY CALL 311.
11. AN APPROVED PREMISES-ISOLATING CROSS CONNECTION CONTROL DEVICE SHALL BE INSTALLED IMMEDIATELY AFTER THE WATER METER OUTLET VALVE ON ALL IRRIGATION SERVICES.
12. △5 METERS MUST BE INSTALLED IN A METER/MECHANICAL ROOM WITHIN REASONABLE DISTANCE OF A FLOOR DRAIN. METER LOCATIONS MUST BE APPROVED BY WATER RESOURCES.

DIMENSIONS ARE IN MILLIMETRES UNLESS OTHERWISE NOTED

No.	Date	Revision	App'd
10	2018/04/30	ADDED IMPORTANT NOTICE	B.N.
9	2017/03/09	REVISED TABLE	B.N.
8	2017/01/09	REVISED NOTE 6	B.N.
7	2015/12/21	REVISED DRAWING AND ADDED NOTE	B.N.
6	2014/11/07	REVISED BY-PASS DETAIL	B.N.
5	2010/11/21	ADDED NOTE No. 12 & ADDED FLOOR DRAIN	B.N.

Date 1987/01/05
Scale N.T.S.
Approved by for The City of Calgary

WATERWORKS CONSTRUCTION

COMPOUND OR TURBINE METER INSTALLATION 75mm & LARGER

Sheet 32
File Number 453.1009.009pt1

ISC: Unrestricted

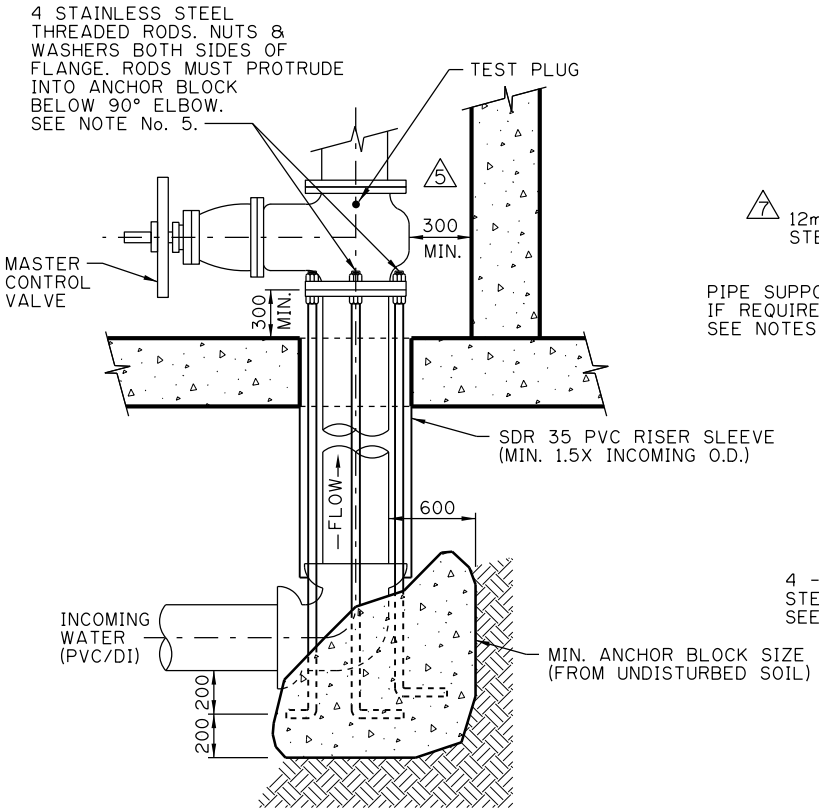

ANCHORAGE THROUGH FLOOR

(MINIMUM REQUIREMENTS)

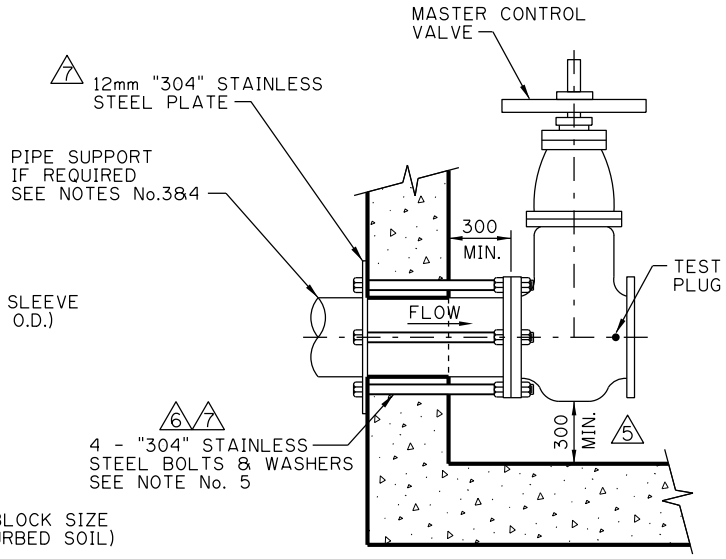

ANCHORAGE THROUGH WALL

(MINIMUM REQUIREMENTS)

✳ BURIED DUCTILE IRON PIPE SHALL BE WRAPPED AS PER 505.03.00 AND PROTECTED WITH A 14.5 KG MAG. ANODE

✳ OPTIONAL USE OF RESTRAINED FLANGE ADAPTOR - SEE NOTE 6

9 ✳ OPTIONAL USE OF SS 304L RISER SECTION FOR REPAIR

CAUTION:

10 WATERWORKS WILL NOT TURN ON WATER UNLESS ANCHOR DETAILS HAVE BEEN INSPECTED BY THE WATERWORKS INSPECTOR PRIOR TO PLACEMENT OF CONCRETE AND PRIOR TO BACKFILL.

NOTES:

1. THE MASTER CONTROL VALVE SHALL BE ONE OF THE FOLLOWING:
   a) RESILIENT SEATED RISING SPINDLE (OS & Y) FLANGED GATE VALVE (UL OR ULC LISTED) FOR FIRE LINES AND CSA APPROVED FOR DOMESTIC LINES.
   b) SHORT-BODY, RUBBER SEATED FLANGED OR LUG WATER TYPE BUTTERFLY VALVE C/W HAND WHEEL, REDUCTION GEAR OPERATOR, POSITION INDICATOR (UL OR ULC LISTED) PROVIDED THEY ARE NOT IN A SUCTION LINE FOR FIRE PUMP(S).

10 6 2. ENTRANCE PIPE MATERIAL THROUGH THE OUTSIDE WALL AND THROUGH THE FLOOR SHALL BE DUCTILE IRON PIPE AWWA C151 (LATEST EDITION) CLASS 53 OR APPROVED EQUAL. BURIED FITTINGS (90° ELBOW) SHALL BE CAST OR DUCTILE IRON CONFORMING TO AWWA C110 (LATEST EDITION) OR APPROVED EQUAL. ALL SEVICE ENTRIES (INCLUDING ANCHOR DETAILS) SHALL BE DESIGNED BY A PROFESSIONAL ENGINEER AND DETAILED ON THE DEVELOPMENT SITE SERVICING PLAN (DSSP). (ANCHOR RODS SHALL BE 18-8 304 STAINLESS STEEL, WHERE A STANDARD 3.0m LENGTH OF ROD REQUIRES EXTENSION, AN APPROVED STAINLESS HEXAGON NUT COUPLING SHALL BE INSTALLED AT THE UPPER END OF THE ROD).

8 3. PROVIDE ADEQUATE PIPE SUPPORT. REFER TO DEVELOPMENT SITE SERVICING PLAN (DSSP) GUIDELINES (5.8(a) & 5.8(c) PIPING SUPPORT)

10 4. UNDERGROUND PIPE IS TO REMAIN JOINT FREE UNDER SLAB AND A MINIMUM OF 2.0m AWAY FROM FOUNDATION. PIPE ENTRIES TO BUILDINGS SHALL BE PERPENDICULAR (90°) TO WALL.

10 9 6 5. ANCHOR RODS TO BE 19mm (3/4") FOR 100mm - 200mm SERVICE, 22mm (7/8") FOR 250mm - 300 mm SERVICE & 25mm (1") FOR 350mm - 400mm SERVICE. ANCHOR ROD AND NUTS TO BE TYPE "304" STAINLESS STEEL.

✳ 6. A RESTRAINED FLANGE ADAPTOR MAY BE USED TO CONNECT THE RISER OR WALL ENTRY PIPE TO THE MASTER CONTROL VALVE. RESTRAINED FLANGE ADAPTOR SHALL BE EBAA SERIES 2100 MEGA FLANGE OR APPROVED EQUAL.

DIMENSIONS ARE IN MILLIMETRES UNLESS OTHERWISE NOTED

No.	Date	Revision	App'd
10	2022/03/14	REVISED EXISTING NOTES	D.N.
9	2019/08/26	REVISED EXISTING NOTES	B.N.
8	2018/04/30	REVISED EXISTING NOTES	B.N.
7	2015/12/16	REVISED EXISTING NOTES	B.N.
6	2014/11/06	REVISED NOTE No. 2 & NOTE No. 5	B.N.
5	2009/12/10	ADDED MIN. DIMENSION	B.N.

Date 1987/01/05
Scale N.T.S.
Approved by for The City of Calgary

WATERWORKS CONSTRUCTION

WATER SERVICE ENTRY 100mm AND LARGER

Sheet 33
File Number 453.1009.009pt2

ISC: Unrestricted

DRAWING DELETED: Waterworks Sheet 34 no longer applicable.

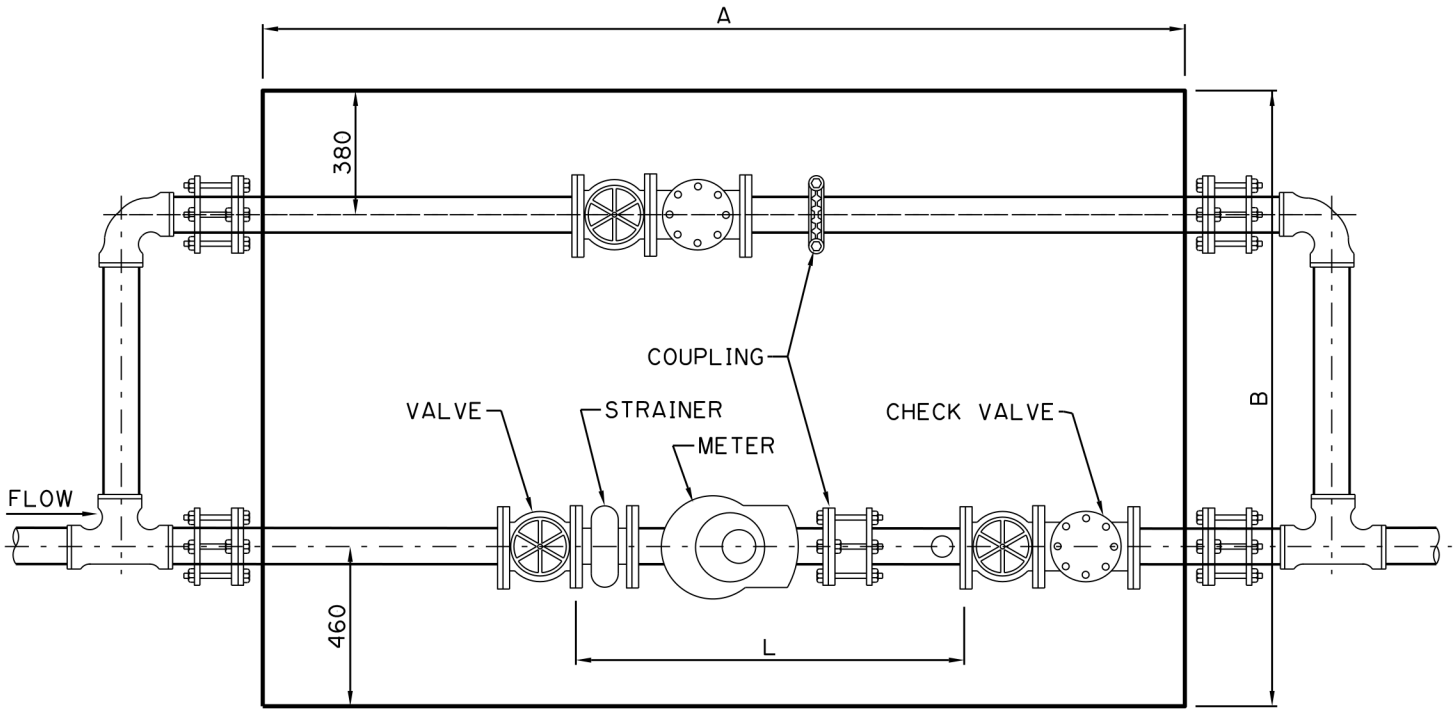

METER SIZE		MIN. I.D. VAULT DIMENSION				METER ASSEMBLY		FLOW LIMITS			
		A		B		L		MIN.		MAX.	
mm	inch	mm	inch	mm	inch	mm	inch	L/min	Igpm	L/min	Igpm
75	3	2160	85	1400	55	1020	40	1.9	0.4	1320	290
100	4	2390	94	1400	55	1145	45	3.8	0.8	2650	580
150	6	2645	104	1400	55	1245	49	5.7	1.3	3790	830

NOTES:

1. * PROVIDE A REINFORCED CONCRETE METER CHAMBER c/w STANDARD MANHOLE ACCESS. INSIDE HEIGHT 2 METERS MINIMUM. ADJUST CHAMBER DIMENSION TO ACCOMMODATE DOUBLE CHECK VALVE ASSEMBLIES IF REQUIRED.
2. THE METER ASSEMBLY (SPACE L) c/w REMOTE READOUT WILL BE SUPPLIED AND INSTALLED BY THE CITY. FLANGES-ANSI B16.1, 125LB DRILLED.
3. PROVIDE 5 DIAMETER LENGTHS OF STRAIGHT PIPE UPSTREAM OF INLET CONTROL VALVE.
4. PROVIDE A SUMP c/w DRAIN TO ROCK PIT. DRAIN TO ROCK PIT IS NOT REQUIRED IF THE WATER TABLE IS HIGH.
5. PROVIDE AN ELECTRICAL CONDUIT c/w 6 #20 COLOR CODED STRANDED COPPER WIRE AND POST TO ACCOMMODATE A REMOTE READOUT.
6. * ANCHOR PIPE TO CHAMBER WALLS AND PROVIDE REACTION BLOCKS FOR TEES AND ELBOWS.
7. * PROVIDE LIFT LUGS OVER METER AND STRAINER.
8. FLOOR TO CENTER LINE OF PIPE DIMENSION TO BE 600mm.
9. PROVIDE ADEQUATE PIPE SUPPORT.
10. VALVES SHALL BE RESILIENT SEATED RISING SPINDLE (OS & Y) FLANGED GATE VALVES, CSA APPROVED.
11. THE BY-PASS PIPING SHALL BE THE SAME SIZE AS THE MAIN LINE.
12. PROVIDE FLEXIBLE COUPLINGS OUTSIDE THE CHAMBER WALLS.

* TO BE DESIGNED AND CERTIFIED BY A PROFESSIONAL ENGINEER.

DIMENSIONS ARE IN MILLIMETRES
UNLESS OTHERWISE NOTED

No.	Date	Revision	App'd
1	2006/02/02	CHANGED SHEET 34 TO 35	B.N.

Date 1987/11/05
Scale N.T.S.
Approved by for The City of Calgary

THE CITY OF CALGARY WATERWORKS CONSTRUCTION

METER VAULT
COMPOUND METER
FOR 75mm & LARGER METERS

Sheet 35
File Number 453.1009.002

ISC: Unrestricted

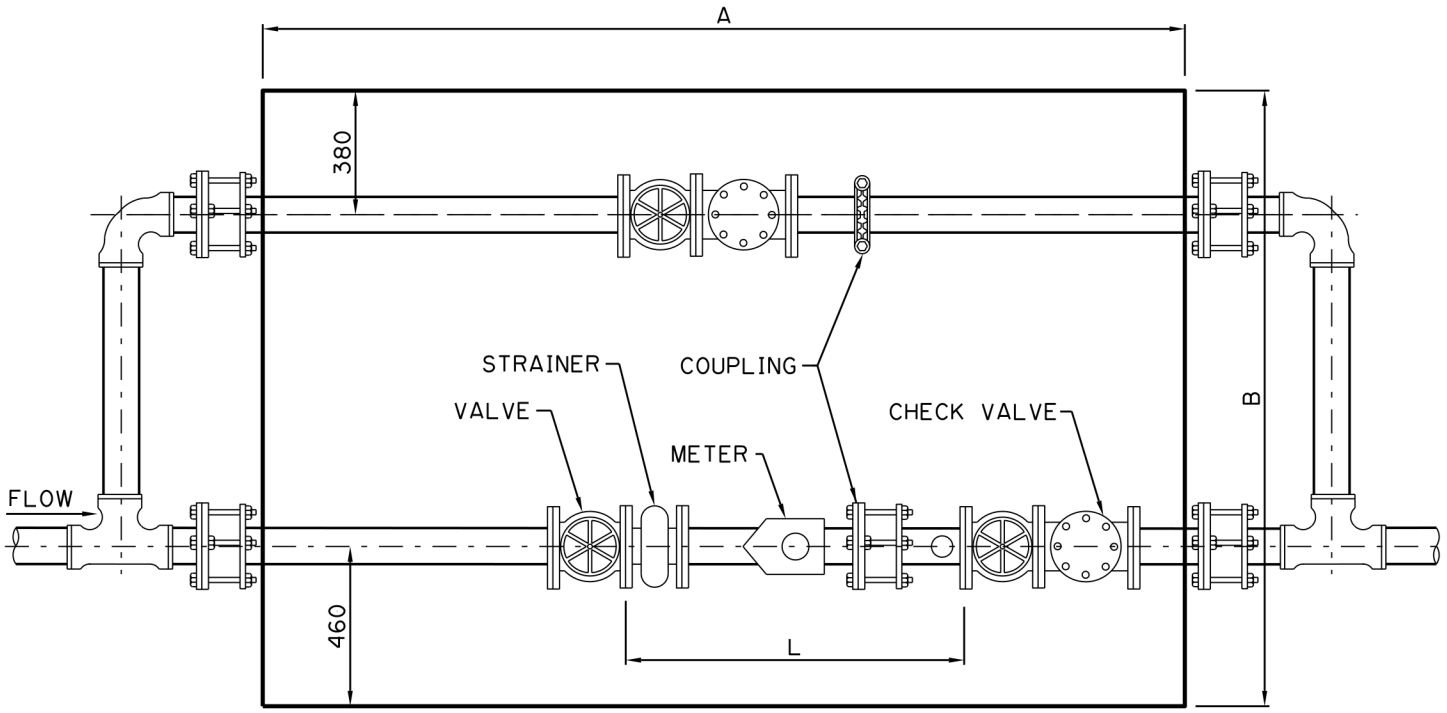

METER SIZE		MIN. I.D. VAULT DIMENSION				METER ASSEMBLY		FLOW LIMITS			
		A		B		L		MIN.		MAX.	
mm	inch	mm	inch	mm	inch	mm	inch	L/min	Igpm	L/min	Igpm
75	3	2035	80	1400	55	895	35	19	4.2	1700	380
100	4	2235	88	1400	55	1000	39	38	8.3	3790	830
150	6	2490	98	1400	55	1095	43	76	17	7570	1670
200	8	2620	103	1800	71	1170	46	130	30	13,250	2910

NOTES:

1. * PROVIDE A REINFORCED CONCRETE METER CHAMBER c/w STANDARD MANHOLE ACCESS. INSIDE HEIGHT 2 METERS MINIMUM. ADJUST CHAMBER DIMENSION TO ACCOMMODATE DOUBLE CHECK VALVE ASSEMBLIES IF REQUIRED.
2. THE METER ASSEMBLY (SPACE L) c/w REMOTE READOUT WILL BE SUPPLIED AND INSTALLED BY THE CITY. FLANGES-ANSI B16.1, 125LB DRILLED.
3. PROVIDE 5 DIAMETER LENGTHS OF STRAIGHT PIPE UPSTREAM OF INLET CONTROL VALVE.
4. PROVIDE A SUMP c/w DRAIN TO ROCK PIT. DRAIN TO ROCK PIT IS NOT REQUIRED IF THE WATER TABLE IS HIGH.
5. PROVIDE AN ELECTRICAL CONDUIT c/w 3 #20 COLOR CODED STRANDED COPPER WIRE AND POST TO ACCOMMODATE A REMOTE READOUT.
6. * ANCHOR PIPE TO CHAMBER WALLS AND PROVIDE REACTION BLOCKS FOR TEES AND ELBOWS.
7. * PROVIDE LIFT LUGS OVER METER AND STRAINER.
8. FLOOR TO CENTER LINE OF PIPE DIMENSION TO BE 600mm.
9. PROVIDE ADEQUATE PIPE SUPPORT.
10. VALVES SHALL BE RESILIENT SEATED RISING SPINDLE (OS & Y) FLANGED GATE VALVES, CSA APPROVED.
11. THE BY-PASS PIPING SHALL BE THE SAME SIZE AS THE MAIN LINE.
12. BY-PASS IS NOT REQUIRED FOR IRRIGATION METERS.
13. PROVIDE FLEXIBLE COUPLINGS OUTSIDE THE CHAMBER WALLS

* TO BE DESIGNED AND CERTIFIED BY A PROFESSIONAL ENGINEER.

DIMENSIONS ARE IN MILLIMETRES
UNLESS OTHERWISE NOTED

No.	Date	Revision	App'd
1	2006/02/09	CHANGED SHEET 35 TO 36	B.N.

Date 1987/11/09
Scale N.T.S.
Approved by for The City of Calgary

THE CITY OF CALGARY WATERWORKS CONSTRUCTION

METER VAULT
DOMESTIC TURBINE METER
FOR 75mm & LARGER METER

Sheet 36
File Number 453.1009.003

ISC: Unrestricted

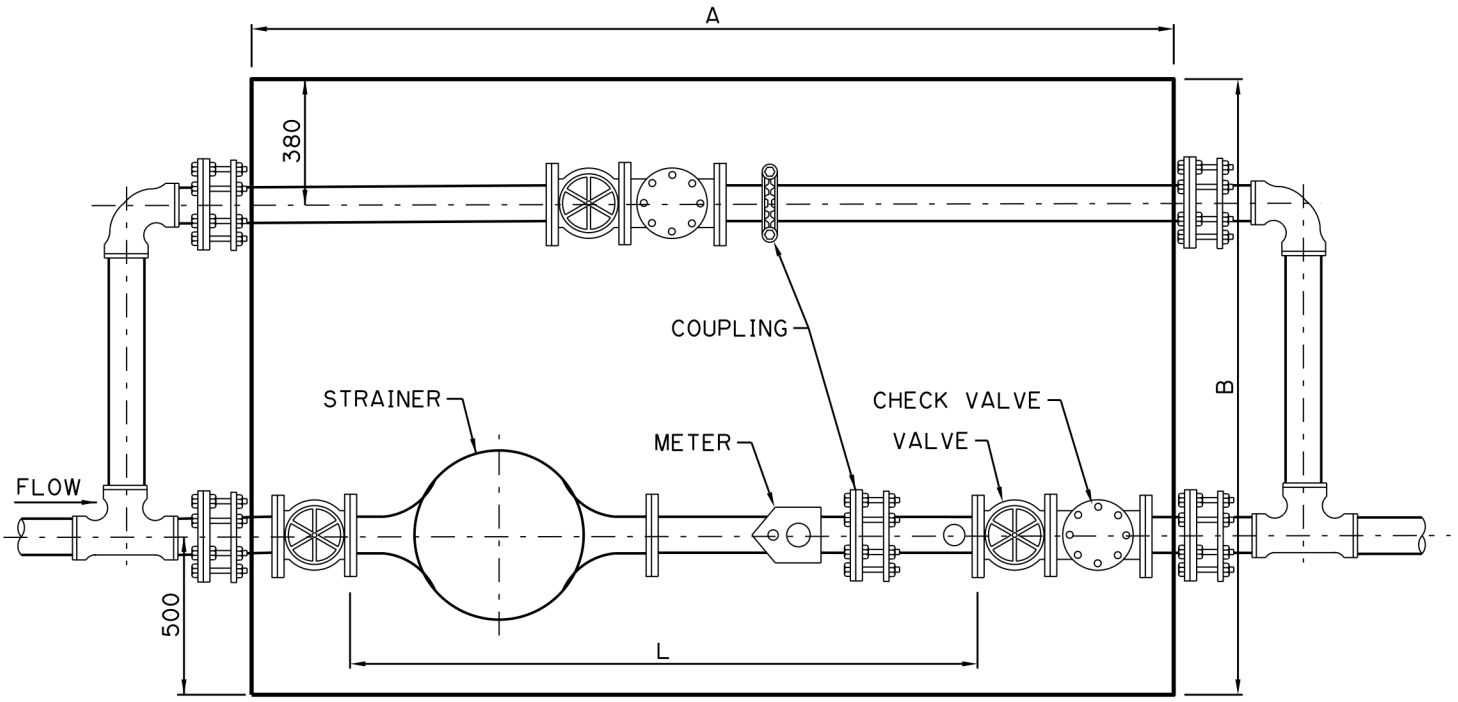

METER SIZE		MIN. I.D. VAULT DIMENSION				METER ASSEMBLY		FLOW LIMITS			
		A		B		L		MIN.		MAX.	
mm	inch	mm	inch	mm	inch	mm	inch	L/min	Igpm	L/min	Igpm
100	4	2540	100	1400	55	1300	51	38	8.3	3790	830
150	6	2950	116	1800	71	1550	61	76	17	7570	1670
200	8	3220	126.5	1800	71	1720	67.5	130	30	13,250	2910
250	10	3600	141.5	1800	71	1825	72	180	40	20,600	4580

NOTES:

1. * PROVIDE A REINFORCED CONCRETE METER CHAMBER c/w STANDARD MANHOLE ACCESS. INSIDE HEIGHT 2 METERS MINIMUM. ADJUST CHAMBER DIMENSION TO ACCOMMODATE DOUBLE CHECK VALVE ASSEMBLIES IF REQUIRED.
2. THE METER ASSEMBLY (SPACE L) c/w REMOTE READOUT WILL BE SUPPLIED AND INSTALLED BY THE CITY. FLANGES-ANSI B16.1, 125LB DRILLED.
3. PROVIDE 5 DIAMETER LENGTHS OF STRAIGHT PIPE UPSTREAM OF INLET CONTROL VALVE.
4. PROVIDE A SUMP c/w DRAIN TO ROCK PIT. DRAIN TO ROCK PIT IS NOT REQUIRED IF THE WATER TABLE IS HIGH.
5. PROVIDE AN ELECTRICAL CONDUIT c/w 3 #20 COLOR CODED STRANDED COPPER WIRE AND POST TO ACCOMMODATE A REMOTE READOUT.
6. * ANCHOR PIPE TO CHAMBER WALLS AND PROVIDE REACTION BLOCKS FOR TEES AND ELBOWS.
7. * PROVIDE LIFT LUGS OVER METER AND STRAINER.
8. FLOOR TO CENTER LINE OF PIPE DIMENSION TO BE 600mm.
9. PROVIDE ADEQUATE STRAINER AND PIPE SUPPORT.
10. VALVES SHALL BE RESILIENT SEATED RISING SPINDLE (OS & Y) FLANGED GATE VALVES, CSA APPROVED.
11. THE BY-PASS PIPING SHALL BE THE SAME SIZE AS THE MAIN LINE. BY-PASS IS NOT REQUIRED FOR IRRIGATION METERS.
12. THE METER AND STRAINER SHALL BE INSTALLED PRIOR TO THE CONSTRUCTION OF THE ROOF SLAB OF A POURED IN PLACE CHAMBER OR THE PLACEMENT OF THE TOP SECTION OF A PRE-FABRICATED CHAMBER.
13. PROVIDE FLEXIBLE COUPLINGS OUTSIDE THE CHAMBER WALLS

* TO BE DESIGNED AND CERTIFIED BY A PROFESSIONAL ENGINEER.

DIMENSIONS ARE IN MILLIMETRES UNLESS OTHERWISE NOTED

No.	Date	Revision	App'd
1	2006/02/09	CHANGED SHEET 36 TO 37	B.N.

Date 1987/11/06
Scale N.T.S.
Approved by for The City of Calgary

THE CITY OF CALGARY WATERWORKS CONSTRUCTION

METER VAULT
FIRE TURBINE METER
FOR 100mm & LARGER METER

Sheet 37

File Number 453.1009.004

ISC: Unrestricted

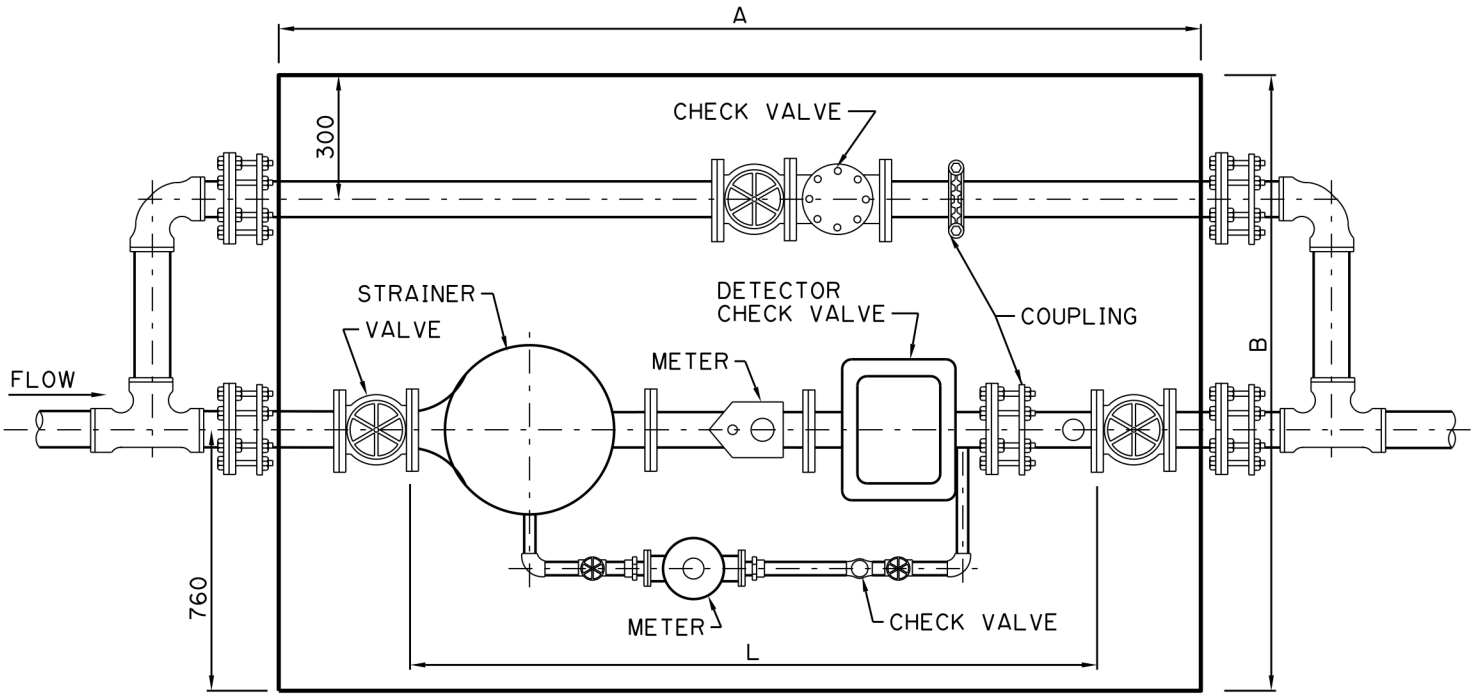

METER SIZE		MIN. I.D. VAULT DIMENSION				METER ASSEMBLY		FLOW LIMITS			
		A		B		L		MIN.		MAX.	
mm	inch	mm	inch	mm	inch	mm	inch	L/min	Igpm	L/min	Igpm
100	4	2240	88	1800	71	1346	53	2.8	0.6	3790	830
150	6	2550	100	1800	71	1651	65	5.7	1.3	7570	1670
200	8	2750	108	1800	71	1854	73	7.6	1.7	13,250	2910
250	10	3135	123	1800	71	2235	88	7.6	1.7	20,800	4580

NOTES:

1. * PROVIDE A REINFORCED CONCRETE METER CHAMBER c/w STANDARD MANHOLE ACCESS. INSIDE HEIGHT 2 METERS MINIMUM. ADJUST CHAMBER DIMENSION TO ACCOMMODATE DOUBLE CHECK VALVE ASSEMBLIES IF REQUIRED.
2. THE METER ASSEMBLY (SPACE L) c/w REMOTE READOUT WILL BE SUPPLIED AND INSTALLED BY THE CITY. FLANGES-ANSI B16.1, 125LB DRILLED.
3. PROVIDE 5 DIAMETER LENGTHS OF STRAIGHT PIPE UPSTREAM OF INLET CONTROL VALVE.
4. PROVIDE A SUMP c/w DRAIN TO ROCK PIT. DRAIN TO ROCK PIT IS NOT REQUIRED IF THE WATER TABLE IS HIGH.
5. PROVIDE AN ELECTRICAL CONDUIT c/w 6 #20 COLOR CODED STRANDED COPPER WIRE AND POST TO ACCOMMODATE A REMOTE READOUT.
6. * ANCHOR PIPE TO CHAMBER WALLS AND PROVIDE REACTION BLOCKS FOR TEES AND ELBOWS.
7. * PROVIDE LIFT LUGS OVER METER AND STRAINER.
8. FLOOR TO CENTER LINE OF PIPE DIMENSION TO BE 600mm.
9. PROVIDE ADEQUATE STRAINER AND PIPE SUPPORT.
10. VALVES SHALL BE RESILIENT SEATED RISING SPINDLE (OS & Y) FLANGED GATE VALVES, CSA APPROVED.
11. THE BY-PASS PIPING SHALL BE THE SAME SIZE AS THE MAIN LINE.
12. THE METER AND STRAINER SHALL BE INSTALLED PRIOR TO THE CONSTRUCTION OF THE ROOF SLAB OF A POURED IN PLACE CHAMBER OR THE PLACEMENT OF THE TOP SECTION OF A PRE-FABRICATED CHAMBER.
13. PROVIDE FLEXIBLE COUPLINGS OUTSIDE THE CHAMBER WALLS

* TO BE DESIGNED AND CERTIFIED BY A PROFESSIONAL ENGINEER.

DIMENSIONS ARE IN MILLIMETRES UNLESS OTHERWISE NOTED

No.	Date	Revision	App'd
1	06/02/09	CHANGED SHEET 37 TO 38	B.N.

Date 1987/11/10
Scale N.T.S.
Approved by for The City of Calgary

THE CITY OF CALGARY WATERWORKS CONSTRUCTION

METER VAULT
DETECTOR TURBINE METER
FOR 100mm & LARGER METER

Sheet 38
File Number 453.1009.005

ISC: Unrestricted

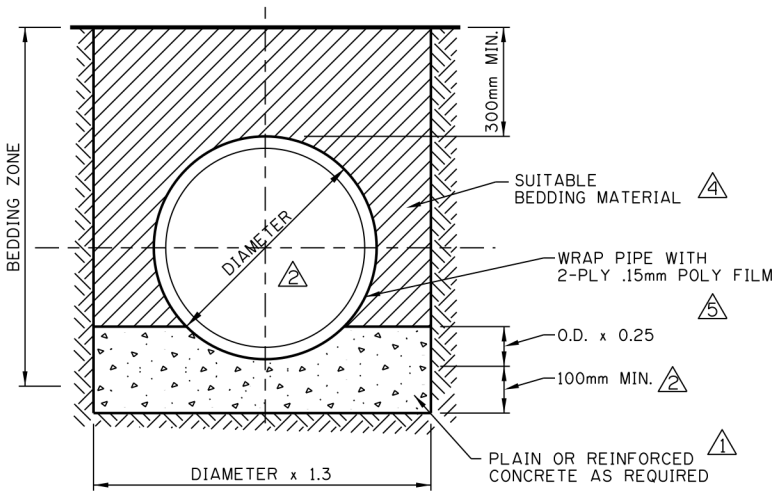

CLASS 'A' BEDDING
GRADE BEAM SUPPORT 5

CONCRETE SUPPORT AND STRUCTURE TIE IN DESIGN SHALL BE CERTIFIED BY A PROFESSIONAL ENGINEER 2

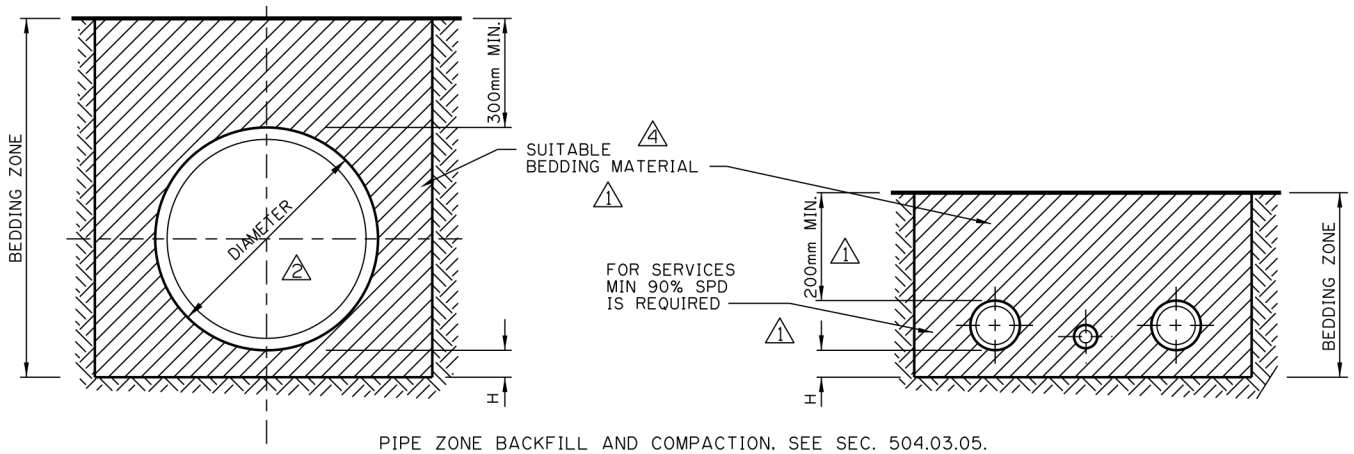

PIPE ZONE BACKFILL AND COMPACTION, SEE SEC. 504.03.05.

TYPE 1 & 2 INSTALLATION (MAINS) 3 5 TYPE 1 & 2 INSTALLATION (SERVICES)

5 'H' FOR TYPE 1 & 2 INSTALLATIONS
2 1 =50mm FOR 100mm OR SMALLER PIPE
=100mm FOR PIPE 150-400mm

4 NOTES:

1 1. ON ROCK FOUNDATION, PIPE SHALL REST ON MIN. 150mm OF APPROVED GRANULAR MATERIAL
2. CONCRETE SHALL BE SULFATE RESISTANT, 15MPa @ 28 DAYS, SLUMP 75mm MAX.
3. SUITABLE BEDDING MATERIAL, SEE SEC. 504.03.04.
4. PIPE ZONE BACKFILL AND COMPACTION, SEE SEC. 504.03.08.
5. FOR STANDARD TRENCH WIDTH SEE SEC. 504.01.06.

DIMENSIONS ARE IN MILLIMETRES
UNLESS OTHERWISE NOTED

No.	Date	Revision	App'd
5	2012/03/21	REVISED DETAIL TITLES, NOTES AND DRAWING	B.N
4	2010/03/12	REVISED NOTES	B.N
3	2009/12/10	REVISED DETAIL TITLE	B.N
2	2008/06/09	REVISED NOTES, TEXT, DIMENSIONS AND DRAWING	B.N
1	2008/01/18	REVISED NOTES, TEXT, DIMENSIONS AND DRAWING	B.N

Date 1989/12/14
Scale N.T.S.
Approved by
for The City of Calgary

THE CITY OF CALGARY WATERWORKS CONSTRUCTION

WATERMAIN & SERVICE
BEDDING CLASSIFICATIONS

Sheet 39
File Number 453.1003.003

ISC: Unrestricted

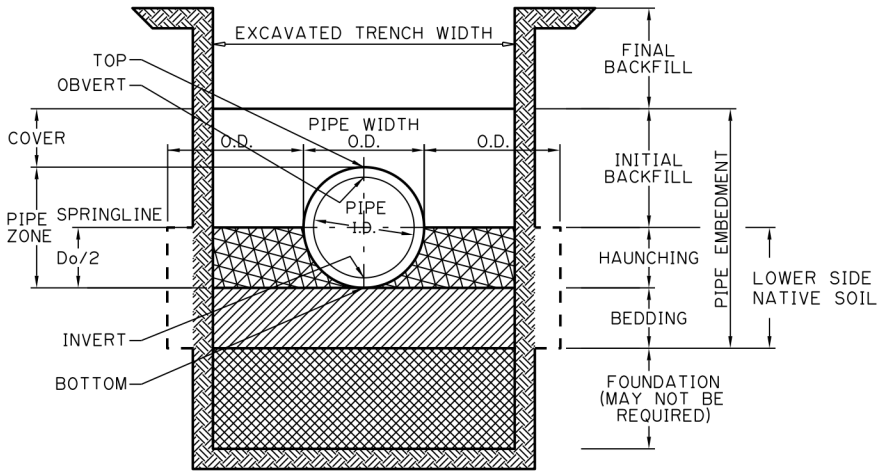

TERMINOLOGY

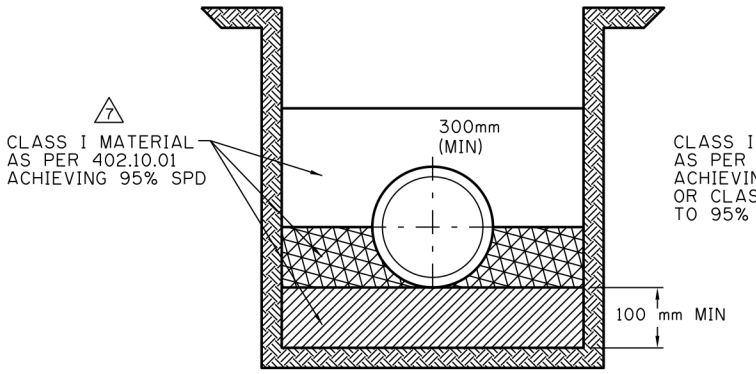

TYPE 1 INSTALLATION

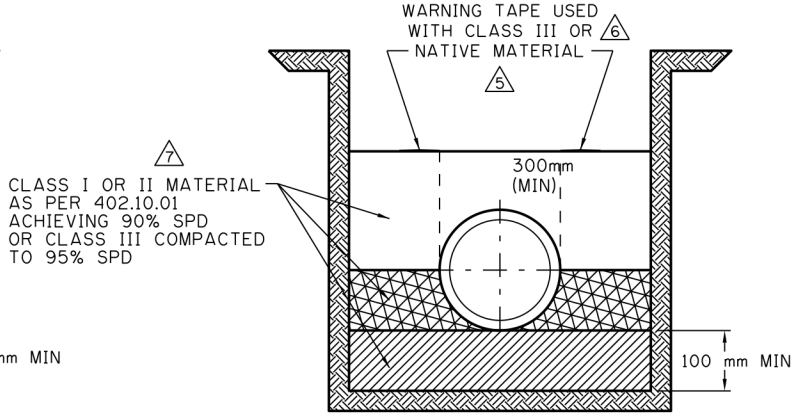

TYPE 2 INSTALLATION

TYPE 1 INSTALLATION REQUIRES THAT THE MATERIAL, DENSITY AND METHOD OF INSTALLATION BE CERTIFIED BY PROFESSIONAL ENGINEER. PRIOR APPROVAL IS REQUIRED FROM WATER RESOURCES.
4

NOTES:

1. FOR ROCK FOUNDATION, MINIMUM BEDDING THICKNESS IS 150mm.
8. BEDDING TO BE INSTALLED TO GRADE PRIOR TO PIPE LAYING.
3. REFER TO CURRENT STANDARD SPECIFICATIONS SEWER CONSTRUCTION SECTION 403.03.03 FOR VERIFICATION OF PROPOSED CONSTRUCTION METHOD CONSISTENT WITH DESIGN INTENT AND ADVISE ENGINEER IF LOWER SIDE NATIVE SOILS ARE SOFTER OR LOOSER THAN PIPE EMBEDMENT SOILS.

DIMENSIONS ARE IN MILLIMETRES UNLESS OTHERWISE NOTED

No.	Date	Revision	App'd
8	2019/08/28	REVISED NOTE	BN
7	2018/05/30	REVISED NOTE	BN
6	2014/10/10	ADD TEXT	BN
5	2012/04/02	REVISED TEXT	BN
4	2012/03/20	REVISED NOTE	BN
3	2012/03/19	REMOVED TYPE 3 INSTALLATION DETAIL	BN

Date 2012/02/01
Scale N.T.S.
Approved by for The City of Calgary

WATERWORKS CONSTRUCTION

BEDDING AND BACKFILL DETAILS (PIPE ZONE)

Sheet 39A
File Number 452.1050.001

ISC: Unrestricted

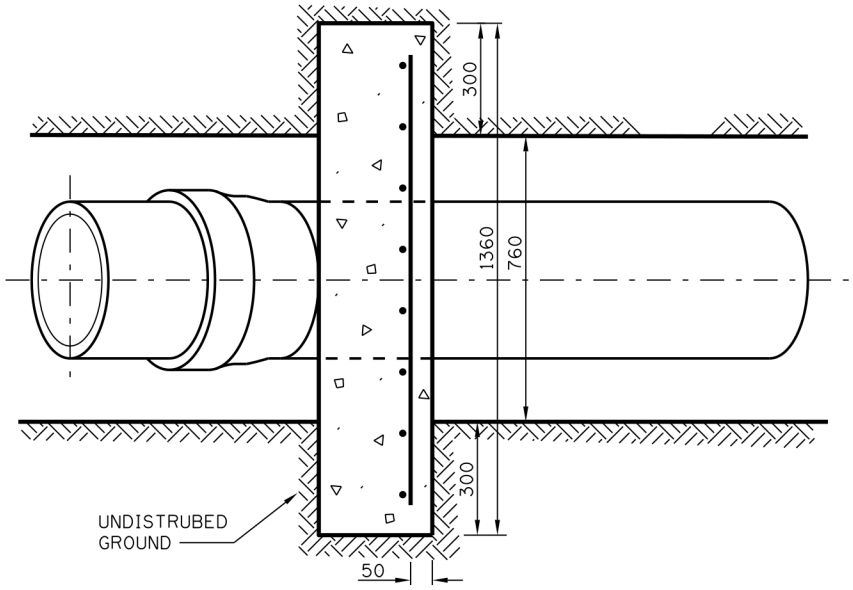

PLAN

NOTES:

1. ANCHORAGE REQUIRED WHERE SLOPE EXCEEDS 1:3
2. ANCHOR PIPE EVERY SECOND JOINT
3. ON UNSTABLE GROUND ANCHOR EACH JOINT
4. CONCRETE SHALL BE 20 MPa AT 28 DAY STRENGTH
5. CONCRETE SHALL BE SULPHATE RESISTANT. MAX. SLUMP 75mm.
6. PLACE 2 PLY OF 0.15mm POLYETHYLENE BETWEEN PIPE AND CONCRETE

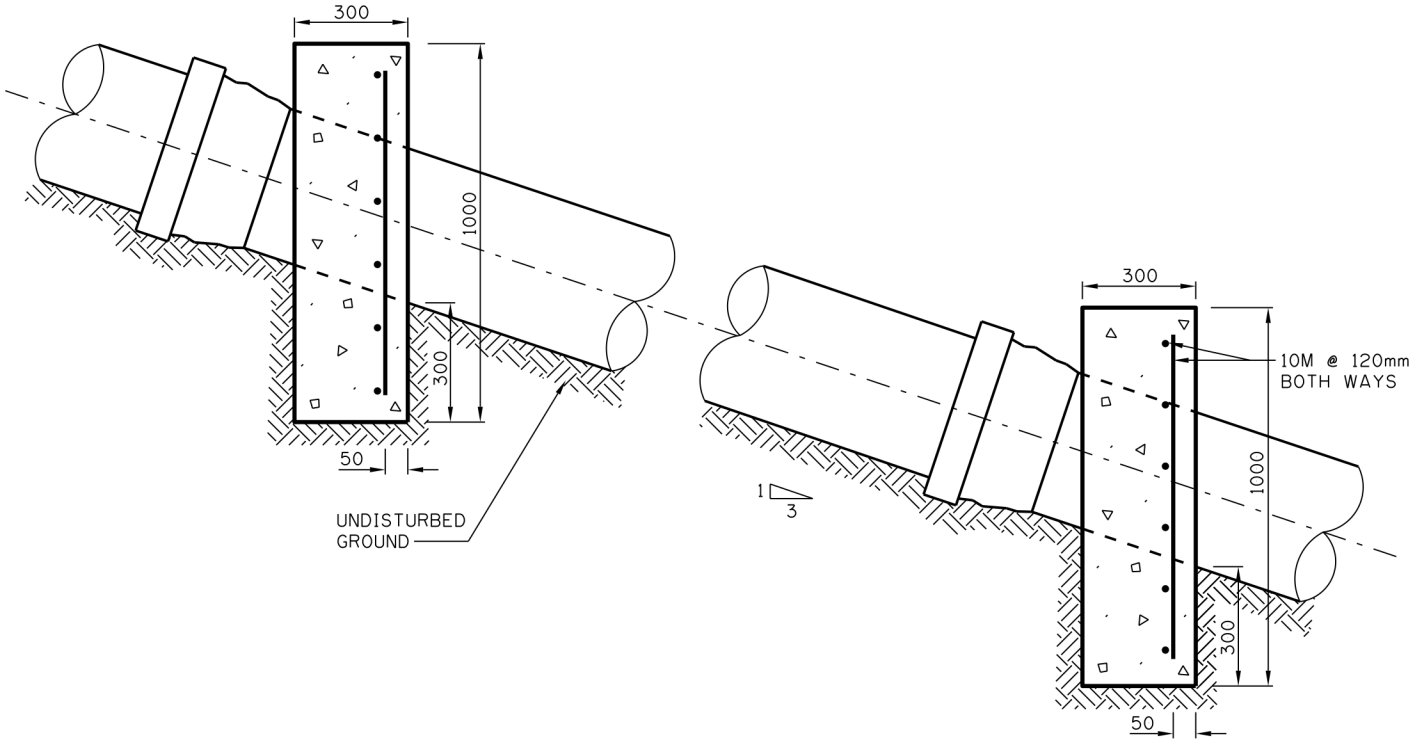

ELEVATION

DIMENSIONS ARE IN MILLIMETRES
UNLESS OTHERWISE NOTED

No.	Date	Revision	App'd

Date
1995/12/07

Scale
N.T.S.

Approved by
for The City of Calgary

THE CITY OF CALGARY WATERWORKS CONSTRUCTION

PIPE ANCHOR
ON STEEP GRADES,
400mm & SMALLER MAINS

Sheet
40

File Number
453.1003.004

ISC: Unrestricted

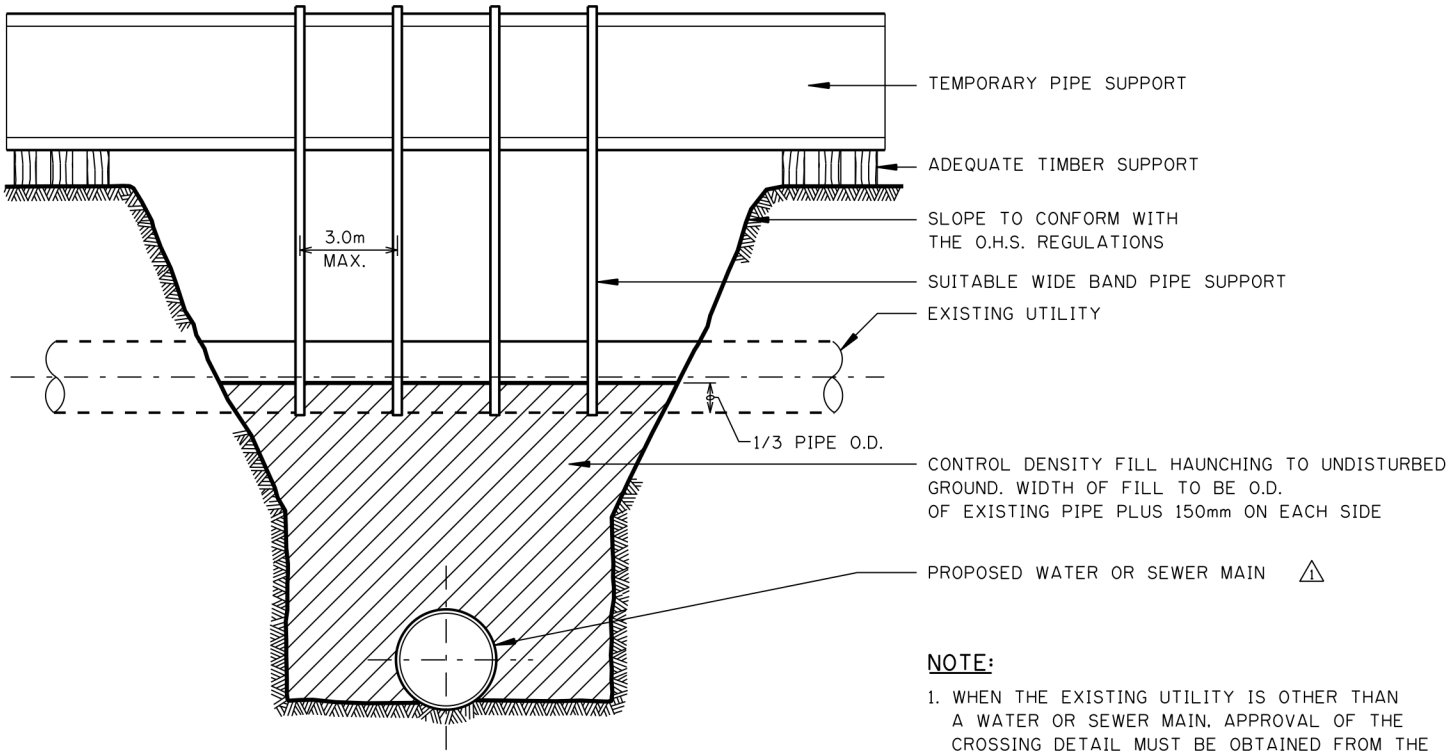

PIPE INSTALLATION CROSSING BELOW AN EXISTING UTILITY

NOTE:

1. WHEN THE EXISTING UTILITY IS OTHER THAN A WATER OR SEWER MAIN, APPROVAL OF THE CROSSING DETAIL MUST BE OBTAINED FROM THE UTILITY CONCERNED.
2. ALL ELEMENTS OF THE TEMPORARY SUPPORT SYSTEM MUST BE DESIGNED BY A PROFESSIONAL ENGINEER.
3. PROVIDE 2-PLY 15 MIL POLY FILM TO PREVENT BONDING OF CONCRETE TO PIPE.
4. NO JOINTS SHALL BE INSTALLED IN THE ENCASED AREA.
5. A FLEXIBLE JOINT SHALL BE PROVIDED WITHIN 1 METRE OUTSIDE OF THE CONCRETED ENCASED UTILITY ON EACH SIDE.

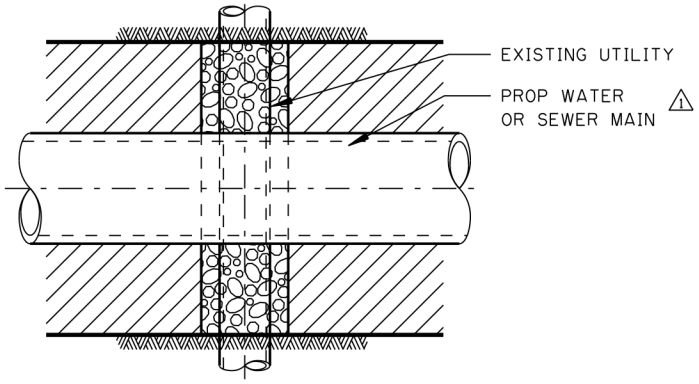

PLAN

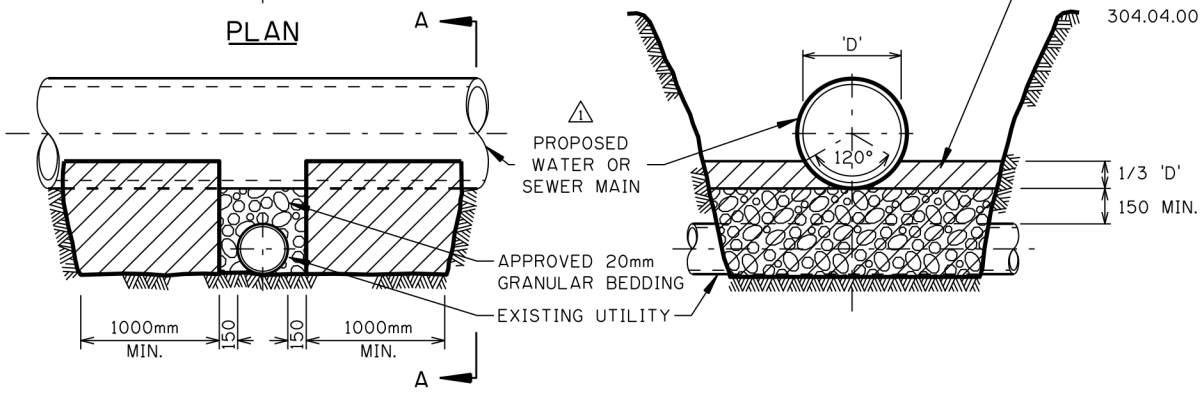

ELEVATION

SECTION A-A

PIPE INSTALLATION CROSSING ABOVE AN EXISTING UTILITY

DIMENSIONS ARE IN MILLIMETRES
UNLESS OTHERWISE NOTED

No.	Date	Revision	App'd
2	2018/04/10	REVISED NOTE	BN
1	2012/01/20	REVISE DETAIL	BN

Date: 1995.12.07
Scale: N.T.S.
Approved by: for The City of Calgary

WATERWORKS CONSTRUCTION

PIPE SUPPORT
AT UTILITY CROSSING

Sheet: 41
File Number: 453.1003.005

ISC: Unrestricted

① CROSS

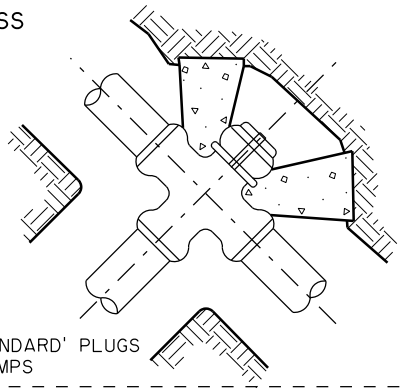

USE 'STANDARD' PLUGS AND CLAMPS

②

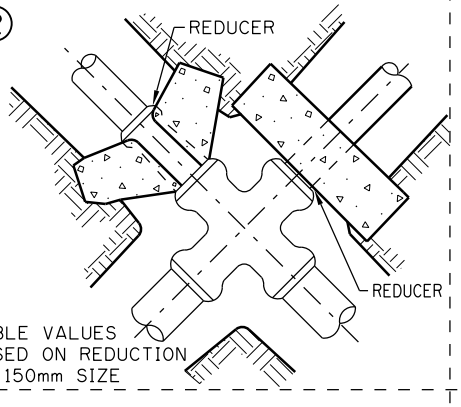

TABLE VALUES BASED ON REDUCTION TO 150mm SIZE

③ CROSS

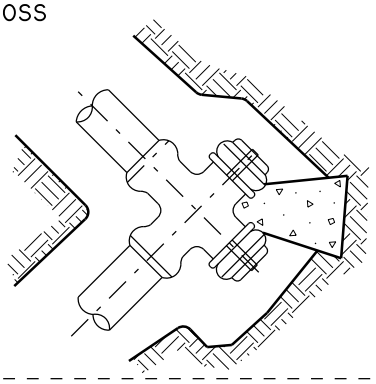

④ TEE (TAPPING OR STANDARD)

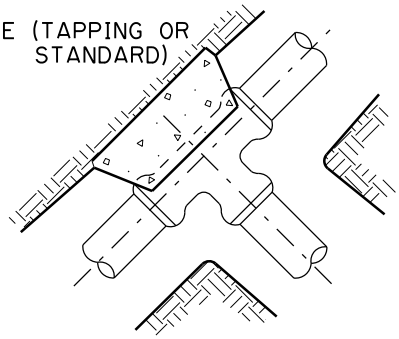

⑤ TEE

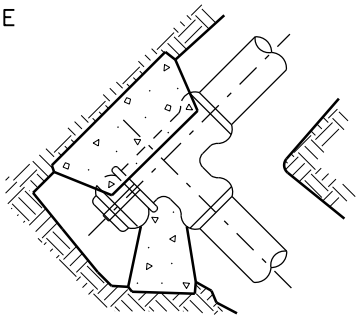

⑥ WYE

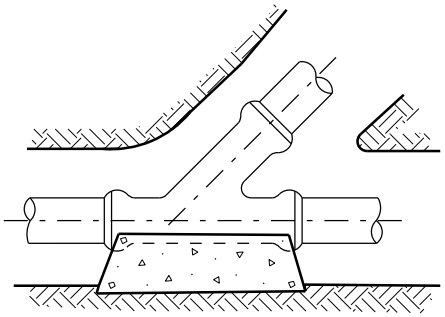

⑦ 90° BEND

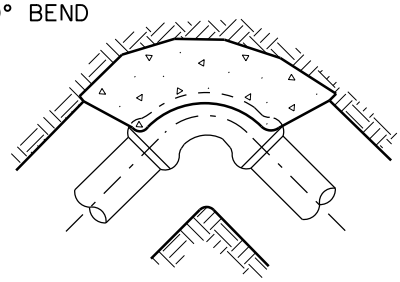

⑧ 45° BEND

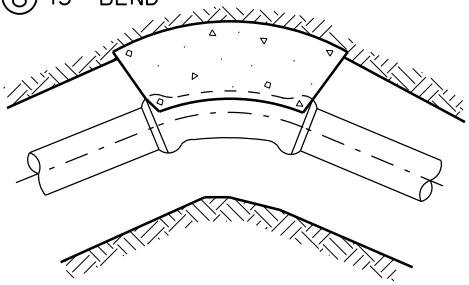

⑨ 11-1/4° & 22-1/2° BENDS

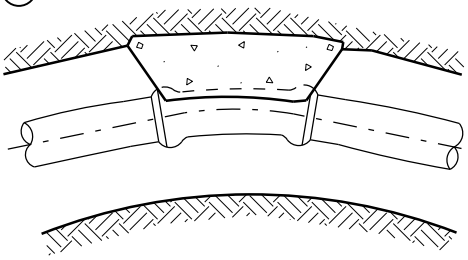

⑩ OFFSET BEND

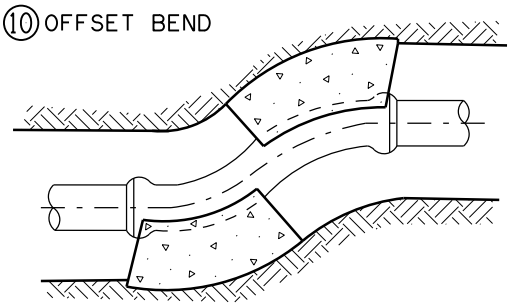

⑪ DEAD END

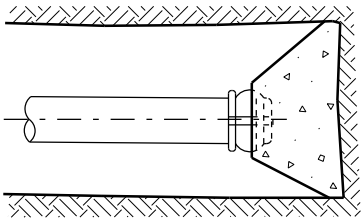

USE 'STANDARD' PLUG

⑫ VERTICAL BEND - UP OR DOWN △3

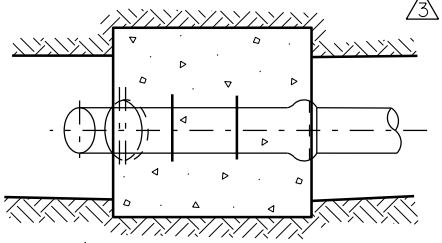

150mm MIN.

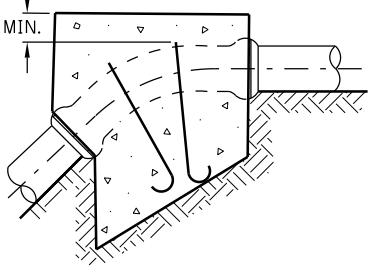

FOR WEIGHT REQUIREMENTS SEE SEC. 504.05.03 OF THESE SPECIFICATIONS.

BEARING AREA OF BLOCKS * △4△2△1

TYPE OF FITTING	CONCRETE AREAS IN SQUARE METRES						
	PIPE SIZE	100	150	200	250	300	400
	1,4,11	0.2	0.4	0.7	1.0	1.4	1.9
	3,5,7	0.3	0.5	0.9	1.4	2.0	2.7
	2	0.2		0.3	0.5	0.7	1.6
	6,8,12	0.2	0.3	0.5	0.6	1.1	1.4
	9	0.1	0.2	0.3	0.4	0.6	0.7
	10	0.3	0.6	1.0	1.2	2.2	2.9

NOTES:

1. DESIGN ASSUMPTION
   a. HYDRAULIC PRESSURE 1.38 MPa (200 psi)
   b. SOIL BEARING 100kPa (2000 lbs/ft²) △1 MEDIUM SOFT CLAY
2. CONCRETE SHALL BE SULPHATE RESISTANT.
3. TEMPORARY BLOCKING MUST BE APPROVED BY THE ENGINEER.
4. 2 PLY OF 0.15mm POLYETHYLENE SHALL BE PLACED BETWEEN PIPE AND CONCRETE.
5. CONCRETE SHALL BE 20 MPa AT 28 DAY STRENGTH. MAX. SLUMP 75mm.
6. THRUST BLOCKS AS PER STD. SPEC. 504.05.03.
   * IN DISTURBED GROUND (COMPACTED BACK FILL) △1 INCREASE BEARING AREA BY 50%
7. ANY THRUST BLOCK SIZING NOT LISTED IS TO BE DESIGNED BY THE CONSULTANT AND SUBMITTED FOR APPROVAL △4

DIMENSIONS ARE IN MILLIMETRES UNLESS OTHERWISE NOTED

No.	Date	Revision	App'd
4	2022/03/14	REVISED & ADDED NOTES	D.N.
3	2014/11/06	REVISED NOTE ON *12 THRUST BLOCK	B.N.
2	2009/12/10	REVISED NOTE	B.N.
1	2000/02/03	* ADDED NOTE & REVISED NOTES	E.P.

Date 1992/01/31
Scale N.T.S.
Approved by
for The City of Calgary

WATERWORKS CONSTRUCTION

THRUST BLOCKS

Sheet 42

File Number 453.1003.007

ISC: Unrestricted

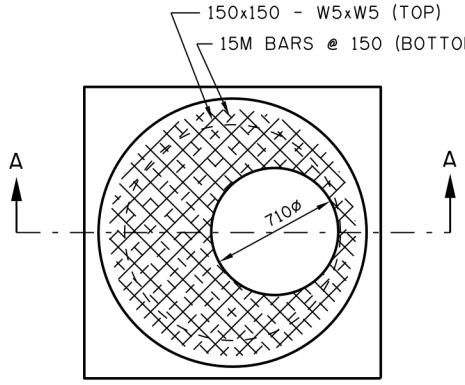

PLAN

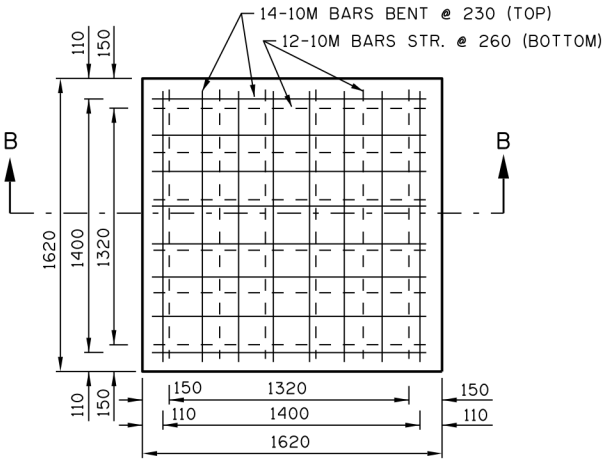

BASE SLAB

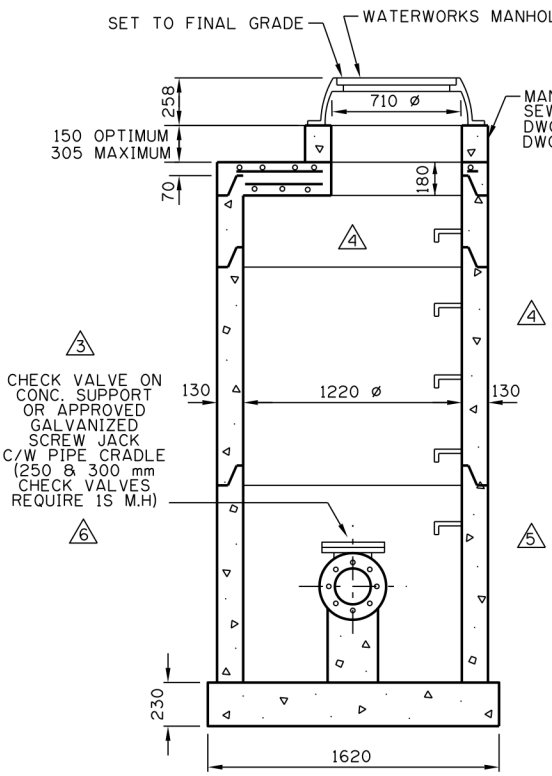

SECTION A-A

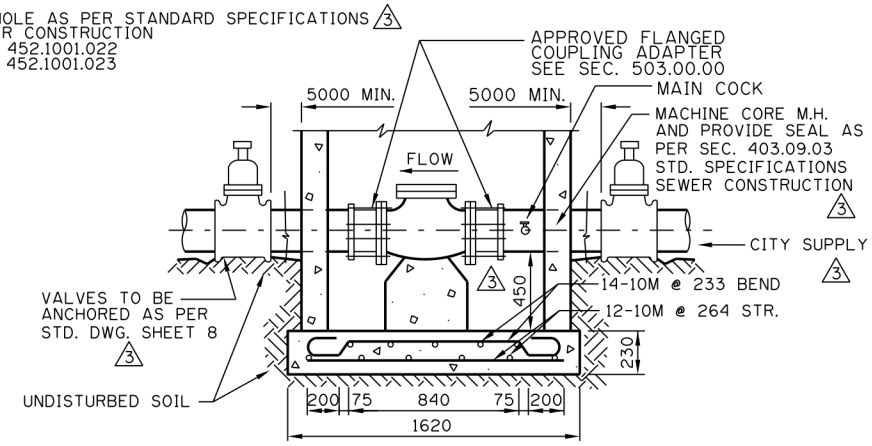

SECTION B-B

NOTES:

1. CHECK VALVES SHALL CONFORM TO SPEC. 503.02.11. CHECK VALVES BETWEEN PRESSURE ZONES SHALL BE SUPPLIED WITH OUTSIDE LEVER AND WEIGHT.
2. 250mm & 300mm CHECK VALVES TO BE PLACED INTO A 1525mm X 1525mm 1S SEWER MH. 400mm CHECK VALVE INTO A 1830mm X 1830mm 1S SEWER MH C/W 5A RISERS AS REQUIRED.
3. COVER FOR REINFORCING STEEL SHALL BE 50mm EXCEPT FOR BOTTOM ROW OF BARS IN BASE SLAB WHERE 75mm COVER SHALL BE USED.
4. CONCRETE STRENGTH TO BE 20MPa IN 28 DAYS.
5. REINFORCING STEEL TO BE INTERMEDIATE GRADE, DEFORMED BARS, f.s. 150MPa TO CONFORM TO A.S.T.M. A305 AND A15 (LASTEST EDITION).
6. ALL LAPS TO BE 30 BAR DIAMETERS.
7. ALL PRECAST CONCRETE M.H. RISERS TO CONFORM TO A.S.T.M. DESIGNATION C 478 (LATEST EDITION).
8. 2 PLY OF 0.15mm POLYETHYLENE SHALL BE PLACED BETWEEN PIPE AND CONCRETE.
9. ALL M.H. BARREL JOINTS SHALL BE SEALED AS PER SEC. 402.05.02 STD. SPECIFICATIONS SEWER CONSTRUCTION.
10. PRE-CAST MH's TO BE APPROVED BY ENGINEER.

DIMENSIONS ARE IN MILLIMETRES
UNLESS OTHERWISE NOTED

No.	Date	Revision	App'd
7	2012/03/18	REVISED NOTE #2	B.N.
6	2008/02/01	REVISED NOTES	B.N.
5	2006/02/09	REVISED MANHOLE RISERS	B.N.
4	2005/02/11	DELETED REF. & DIMENSIONS	B.N.
3	2005/02/07	REVISED NOTE & DRAWING	B.N.
2	2003/02/28	ADDED SERVICE VALVE	B.N.

Date 1995/12/06
Scale N.T.S.
Approved by for The City of Calgary

THE CITY OF CALGARY WATERWORKS CONSTRUCTION

MANHOLE FOR 150mm & 200mm CHECK VALVES

Sheet 43
File Number 453.1006.003

ISC: Unrestricted

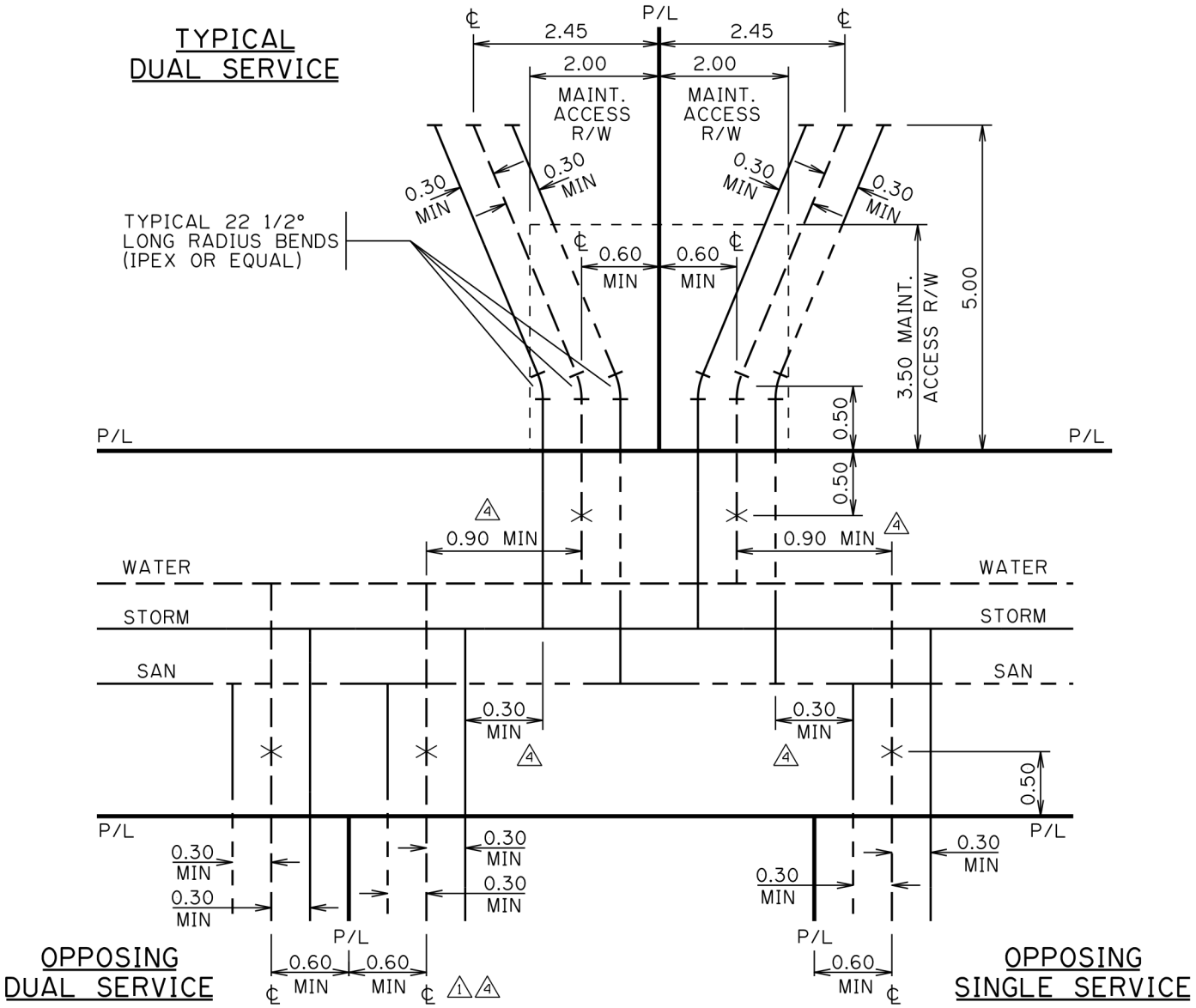

NOTES:

1. A COMMON ACCESS AGREEMENT SHALL BE REGISTERED ON THE TITLE OF EACH LOT. THE EASEMENT SHALL BE 4.0m WIDE (2.0m PER LOT) AND EXTEND 3.5m INTO EACH LOT.
2. DEEP SERVICES TO BE INSTALLED IN A COMMON TRENCH CENTRED ON P/L SEPARATING TWO FRONT SERVICED LOTS. SERVICE ENTRY SHALL BE ON THE FRONT OF THE DWELLING.
3. SHALLOW UTILITY SERVICING IS TO BE INSTALLED FROM THE LANE OR ON THE OPPOSITE SIDE OF EACH LOT TO AVOID CONFLICT.
3 4. THE VERTICAL SEPARATION BETWEEN WATER, SANITARY AND STORM MAINS IN THE STREET SHALL BE MINIMIZED AS MUCH AS POSSIBLE TO FACILITATE MAINTENANCE.
5. DEEP SERVICE LINES SHALL BE CONNECTED TO MAINS IN THE STREET AND INSTALLED IN A COMMON TRENCH WITH MINIMUM SEPARATION OF 300mm WITHOUT CROSSING.
6. WATER SERVICE VALVES TO BE LOCATED ON STANDARD LINE ASSIGNMENT IN THE ROAD RIGHT OF WAY.
7. THE DEEP SERVICE LINES ARE TO BE FLARED INTO SEPARATE TRENCHES INSIDE THE PROPERTY AND EXTENDED TO 3.5m INSIDE OF P/L OR 5.0m INSIDE OF P/L WHEN CROSSING THE SHALLOW UTILITY EASEMENT. A SINGLE LONG RADIUS 22½ DEGREE BEND IS PERMITTED ON THE STORM AND SANITARY SERVICES RESPECTIVELY, AND SHALL BE LOCATED ON PROPERTY AT THE P/L WITHIN THE MAINTENANCE RIGHT OF WAY.
4 2 8. WATER SERVICES SHALL MAINTAIN A MIN OF 0.9m SEPARATION BETWEEN OPPOSING SINGLE OR DUAL WATER SERVICES.

DIMENSIONS ARE IN METRES
UNLESS OTHERWISE NOTED

No.	Date	Revision	App'd
4	2018/05/07	REVISED DIMENSIONS, NOTE AND DETAIL	B.N.
3	2017/05/05	REVISED NOTE #4	B.N.
2	2015/10/29	REVISED NOTE #8	B.N.
1	2014/11/07	REVISED NOTES & DETAIL DRAWING	B.N.

Date 2014/09/08
Scale N.T.S.
Approved by
for The City of Calgary

WATERWORKS CONSTRUCTION

DUAL SERVICING
FOR SINGLE &
SEMI-DETACHED LOTS

Sheet 44
File Number 453.1047.001

ISC: Unrestricted

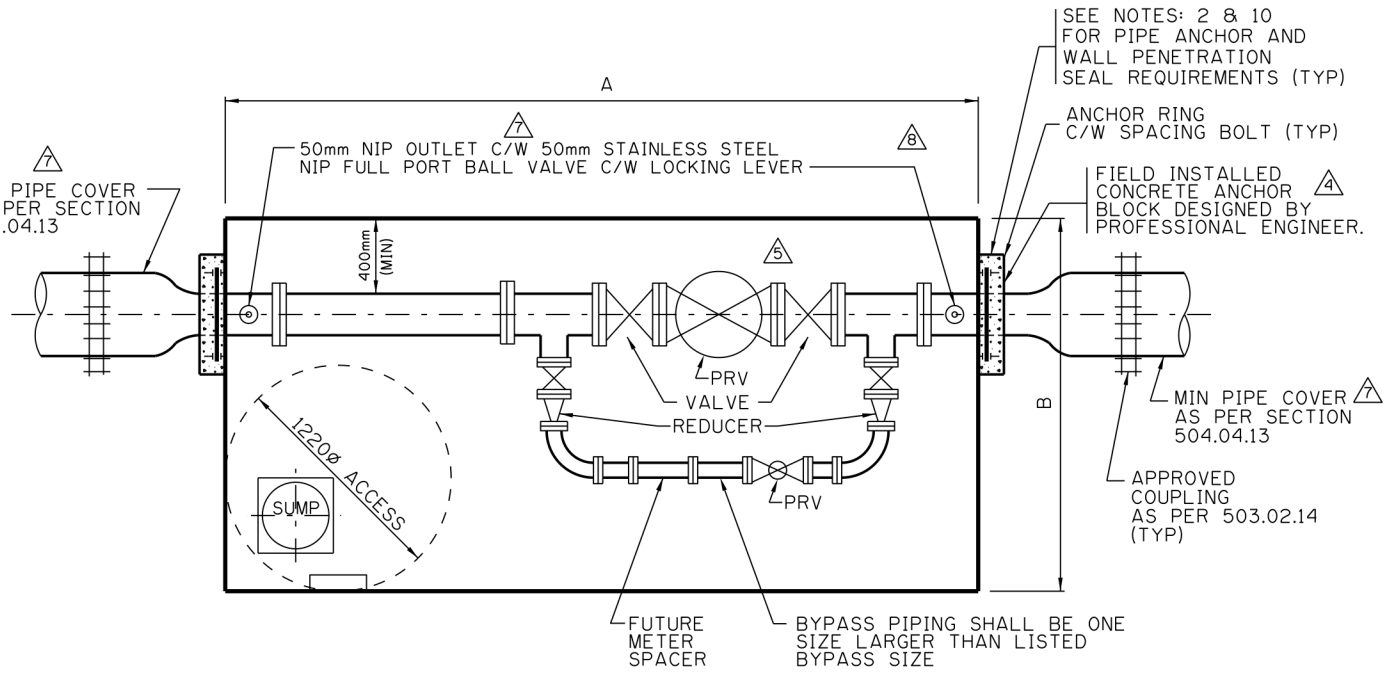

PRV SIZE			MINIMUM I.D. VAULT DIMENSION	
MAIN PRV mm	BYPASS PRV mm	METER SPACER mm	A mm	B mm
150	75	895	4000	1980
200	100	1000	4000	1980
250	100	1095	4000	1980
300	150	N/A	4000	1980

NOTES:

6 8 10 1. PROVIDE A PRE-ASSEMBLED PRESSURE REDUCING VALVE CHAMBER CERTIFIED BY A PROFESSIONAL ENGINEER AS PER CITY OF CALGARY STANDARD SPECIFICATIONS C/W ALL MECHANICAL INSTALLATION INCLUDING SUMP AND GALVANIZED LADDER. CONCRETE STRUCTURE SHALL BE DESIGNED FOR CL-800 TRUCK LOADING AS PER CSA-S6-00. SLAB TOP SHALL BE DESIGNED FOR FULL 1220mm MANHOLE ID ACCESS AND PROVIDE A FORMED SPIGOT UP LIP TO ACCOMMODATE INSTALLATION OF STANDARD SPIGOT UP CITY OF CALGARY 5A MANHOLE BARRELS. INSIDE HEIGHT SHALL BE 2m MIN. AS PRODUCED BY CORIX WATER SYSTEMS, AWC PROCESS SOLUTIONS VALVE AND CONTROLS, PROFORM AND COAST WATER. PRV SPECIFICATION AND HARDWARE AS PER SECTION 503.02.10.

6 2. ANCHOR PIPE TO CHAMBER WALLS. ELECTRICALLY ISOLATE PIPE FROM REINFORCING STEEL AND PROVIDE CATHODIC PROTECTION FOR PIPE OUTSIDE OF CHAMBER. ANCHOR RING MAY BE PRECAST IN VAULT WALL OR POURED IN PLACE AS PER NOTE 9.

3. VALVES SHALL BE RESILIENT SEATED RHO NON-RISING SPINDLE GATE TYPE UNLESS OTHERWISE SPECIFIED C/W HANDWHEEL & OPERATING NUT. PROVIDE A C.O.C. STANDARD VALVE CASING RISER PROJECTING A MINIMUM OF 2 METERS HIGHER THAN THE VAULT TOP SLAB ABOVE EACH VALVE. CASING RISER PENETRATIONS THROUGH THE VAULT TOP SHALL BE CONSTRUCTED TO BE WATERTIGHT.

6 4. INTERNAL FITTINGS TO BE FLANGED CI, DI OR FABRICATED STEEL UNLESS OTHERWISE APPROVED. PIPE SHALL BE STANDARD WALL SCHEDULE 40 STEEL OR DUCTILE IRON CLASS 53 C/W FLANGE. WELDED STEEL FLANGES SHALL BE AWWA C207-13 CLASS "D". ALL FITTINGS AND PIPE SHALL BE INTERNALLY AND EXTERNALLY COATED AS PER NOTE 8. BOLT AND WASHERS SHALL BE TYPE 304 STAINLESS STEEL. PROVIDE 2-50mm NIP PLUGGED OUTLETS; ONE AT EACH END OF THE PIPING ASSEMBLY LOCATED A MINIMUM OF 300mm FROM THE CHAMBER WALL. PROVIDE A MINIMUM OF 3 VICTAULIC 77 OR SHURJOINT 7707 JOINTS OR APPROVED EQUAL DISASSEMBLING JOINTS. ONE SUCH JOINT SHALL BE AT EACH END OF THE PIPING ASSEMBLY 600mm FROM THE CHAMBER WALL AND AT LEAST ONE MUST BE PROVIDED IN THE BYPASS PIPING BETWEEN THE BYPASS PIPING REDUCERS.

5. PROVIDE LIFT LUG OVER 150mm & LARGER PRV & 75mm OF FOAM INSULATION ON UPPER HALF OF VAULT.

6 6. MINIMUM CLEARANCE BETWEEN FLOOR AND INVERT OF ALL PIPING SHALL BE 600mm MIN. PROVIDE A MINIMUM OF 400mm CLEARANCE BETWEEN ALL PRV PIPING AND PARALLEL WALLS OF VAULT. INTERIOR PIPING LAYOUT SHALL NOT INTRUDE ON LADDER OR ACCESS WAY OR BELOW MANHOLE ACCESS.

7. PROVIDE ADEQUATE VALVE & PIPE SUPPORT. SUPPORTS TO BE GALVANIZED OR STAINLESS STEEL.

9 8. ALL INTERIOR PIPE, VALVES AND FITTINGS TO BE FUSION OR LIQUID EPOXY COATED TO AWWA 213 OR 210 & NSF61 INTERIOR AND EXTERIOR WITH TOP COAT OF ENAMEL PAINT (SHERWIN WILLIAMS 4086 "SAFETY BLUE" OR EQUIVALENT) IN COMPLIANCE WITH THE CANADIAN PAINTING CONTRACT ASSOCIATION (CPCA) MANUAL.

9. THE CHAMBER SHALL BE SUPPLIED WITH A POURED IN PLACE APPROVED WALL SLEEVE AND THE PIPE SECTION THROUGH THE SLEEVE SHALL BE SUPPORTED WITH AN APPROVED WALL PENETRATION SEAL. SEE SEC. 503.00.00. THE CHAMBER SHALL BE WATERTIGHT.

10. LID AND COVER SHALL BE TROJAN TF-48 OR APPROVED EQUAL.

11. BYPASS SHALL BE EQUIPPED WITH SUITABLE SPACER TO ACCOMODATE FUTURE DISTRICT METER.

10 12. LADDER SHALL BE GALVANIZED STEEL, SS 304, OR APPROVED NON-METALLIC.

DIMENSIONS ARE IN MILLIMETRES UNLESS OTHERWISE NOTED

No.	Date	Revision	App'd
10	2019/08/26	REVISED NOTES	B.N.
9	2018/05/07	REVISED NOTE	B.N.
8	2015/12/15	REMOVED NOTE ON DRAWING & ADDED INFO ON NOTE 1	B.N.
7	2015/10/28	ADDED NOTES	B.N.
6	2015/01/14	REVISED NOTES 1, 2, 4 & 6 & REMOVE NOTES 10 & 13	
5	2014/12/12	REVISED NOTES 1, 3 & 10 & REVISED BYPASS	B.N.

Date 1991/12/18
Scale N.T.S.
Approved by for The City of Calgary

WATERWORKS CONSTRUCTION

PRESSURE REDUCING VALVE CHAMBER PRV WITH BY-PASS

Sheet 45

File Number 453.1038.001

ISC: Unrestricted

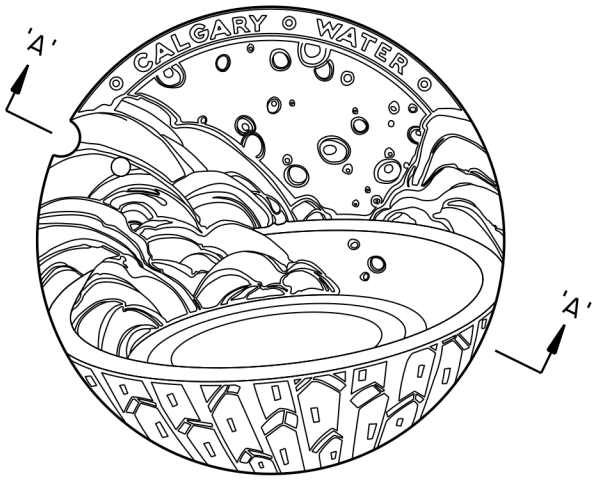

TOP VIEW

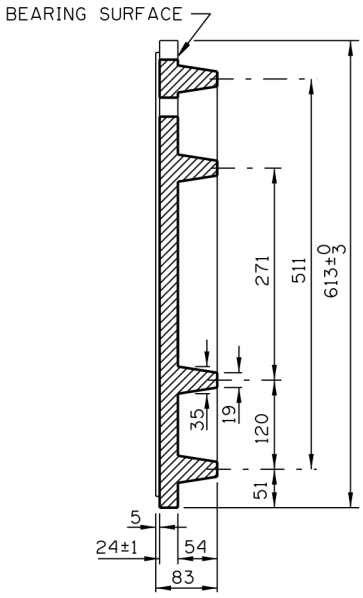

SECTION 'A-A'

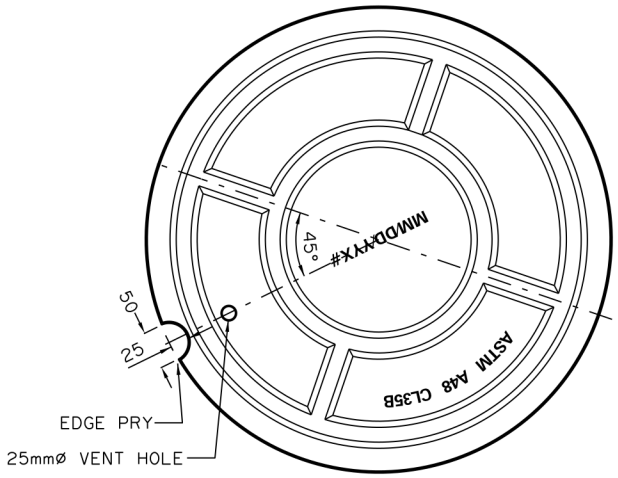

BOTTOM VIEW

MATERIAL SPECIFICATIONS:

- GREY CAST IRON TO CONFORM TO CLASS 35B A.S.T.M A48 (LATEST EDITION)
- BEARING SURFACE SHALL BE GROUND OR MACHINED TO PREVENT ROCKING
- NOMINAL MASS = 72 KILOGRAMS ±5%
- COATED CASTINGS ACCEPTED ONLY WHEN REQUIRED BY CITY

DIMENSIONS ARE IN MILLIMETRES UNLESS OTHERWISE NOTED

No.	Date	Revision	App'd

Date: 2019/11/28
Scale: N.T.S.
Approved by: for The City of Calgary

WATERWORKS CONSTRUCTION

STANDARD WATER MANHOLE COVER

Sheet: 46
File Number: 453.2005.001

ISC: Unrestricted

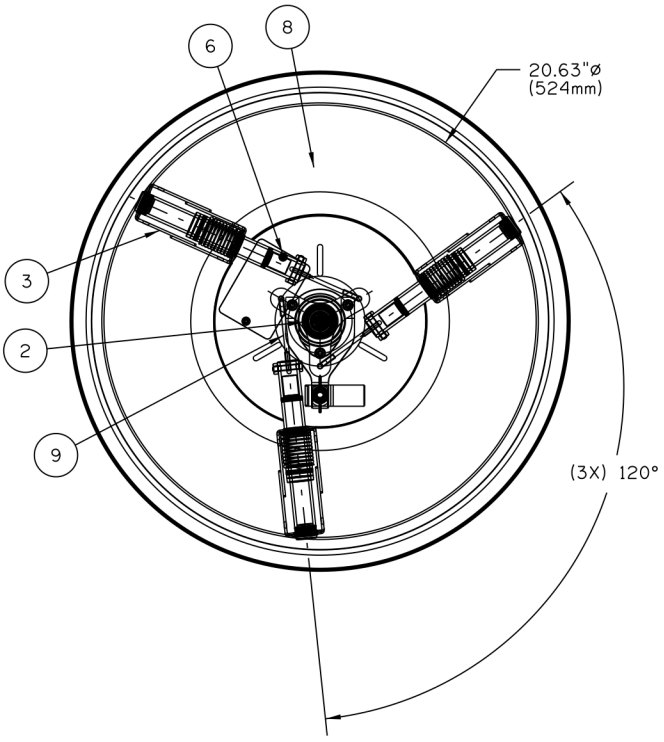

PISTONS RETRACTED

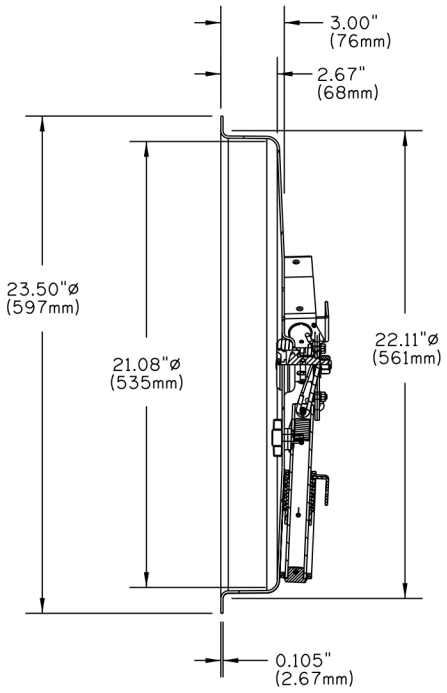

SECTION

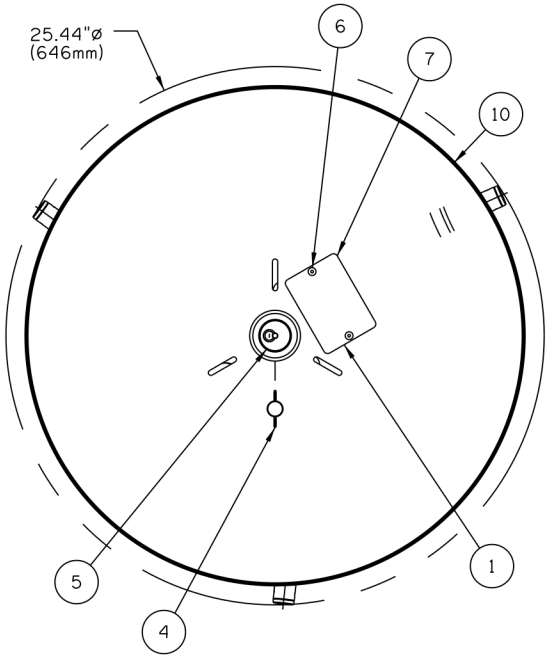

PISTONS EXTENDED

NOTE:

TO BE INSTALLED BY CITY OF CALGARY WATER SERVICES STAFF ONLY OR WITH APPROVAL FROM THE MANAGER OF PUBLIC RESPONSE (WATER SERVICES).

NO.	QTY.	PART No.	TITLE
1	1	141118	DURASHIELD ID / SERIAL TAG
2	1	141120	CENTER SECTION ASSY. DURASHIELD
3	3	141122	CARTRIDGE ASSEMBLY. 2.5" STROKE
4	1	142119	SHIPPING BRACKET. 3/8"-16
5	1	142163	DUST CAP. 2 SEALS. DURASHIELD
6	5	142195	POP RIVET: 3/16" DIA x 1/4" LG
7	1	142199	SERIAL TAG SPACER PLATE
8	1	1421AS221	SKID PLATE. 22.1" STD CLEAR
9	3	1421WF0373	HARDENED WIRE FORM
10	1	14SP2210	DS 22.1" CLEAR PAN. SPUN/WELDED. 23.50" TRIM

NOTES:

1. ALL REFERENCED DIMENSIONS ARE APPROXIMATELY WITHIN 0.50" (12.7mm).
2. SUPPLIED AND INSTALLED BY CITY OF CALGARY FIELD SERVICES ONLY.

DIMENSIONS ARE IN MILLIMETRES UNLESS OTHERWISE NOTED

No.	Date	Revision	App'd

Date: 2020/01/13
Scale: N.T.S.
Approved by: for The City of Calgary

WATERWORKS CONSTRUCTION

MANHOLE FRAME LOCKING COVER

Sheet: 46A

File Number: 453.1012.006

ISC: Unrestricted

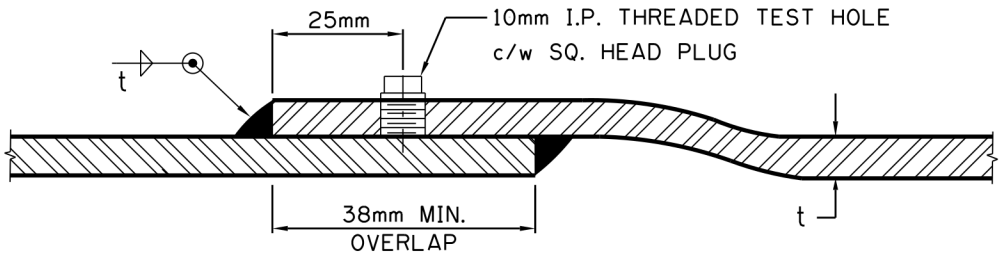

1

REF. SPEC. -A.W.W.A. C206-97
-A.W.W.A. C200-97
(SEC. 3.6.)

LAP JOINT

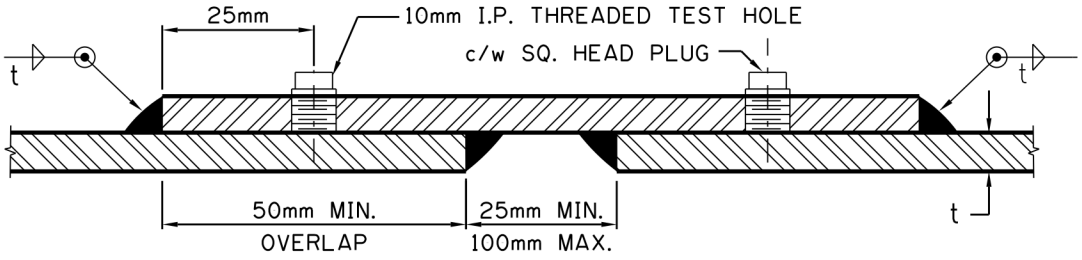

1

REF. SPEC. -A.W.W.A. C206-97
-A.W.W.A. C200-97
(SEC. 3.6.)

BUTT STRAP JOINT

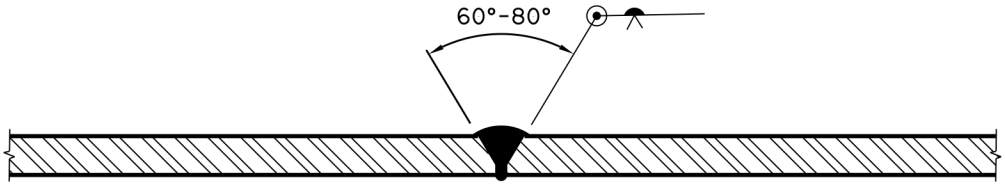

1

REF. SPEC. -A.W.W.A. C206-97
-A.W.W.A. C200-97
(SEC. 3.6.)

BUTT JOINT

DIMENSIONS ARE IN MILLIMETRES
UNLESS OTHERWISE NOTED

No.	Date	Revision	App'd
1	2006/02/15	REVISED YEAR OF AWWA SPEC	B.N.

Date 1986/11/26
Scale N.T.S.
Approved by
for The City of Calgary

THE CITY OF CALGARY WATERWORKS CONSTRUCTION

WELDED JOINTS
FOR STEEL PIPE

Sheet 47

File Number 453.1020.005

ISC: Unrestricted

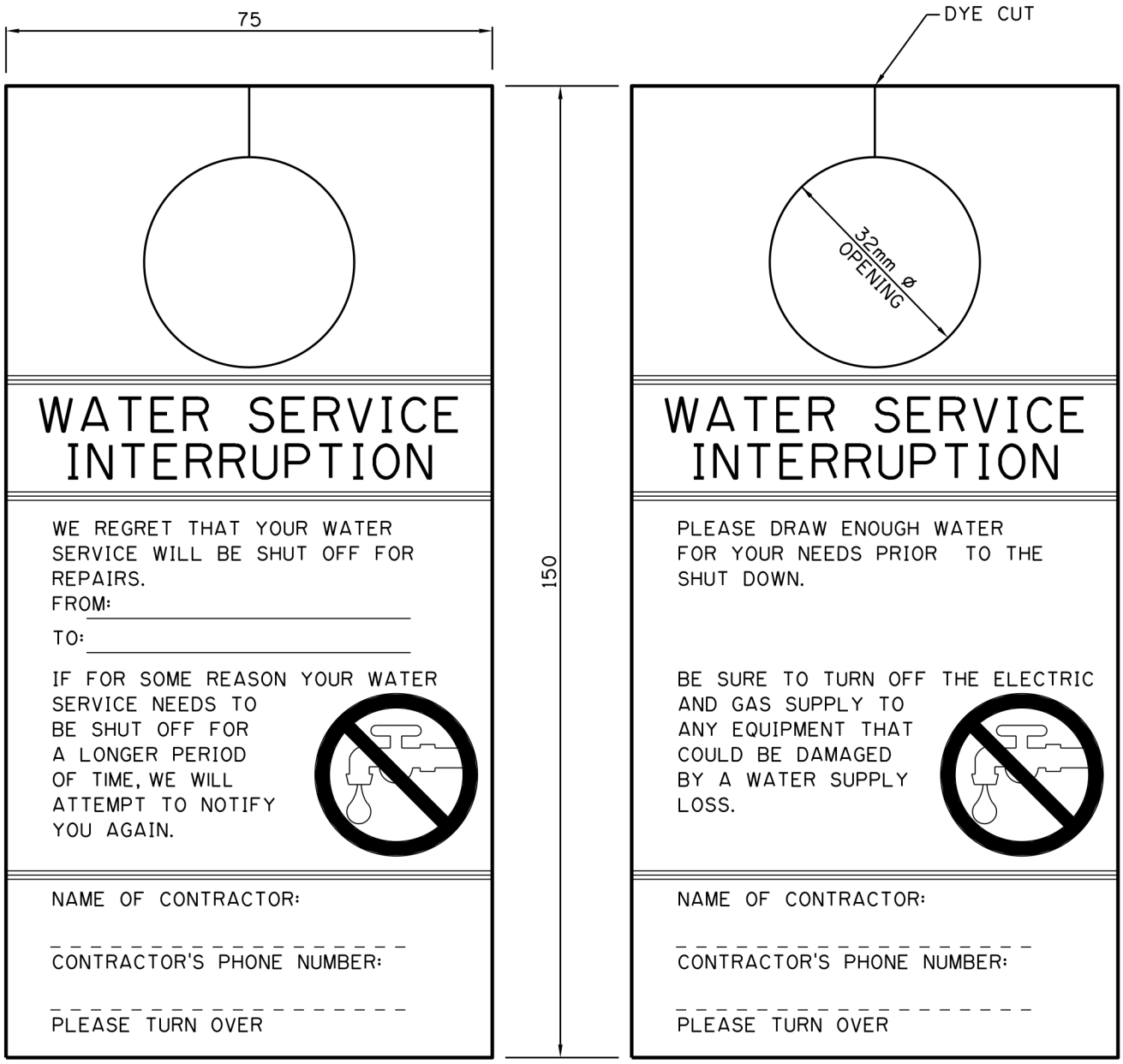

FRONT SIDE

BACK SIDE

NOTES:

1. WARNING NOTICE MATERIAL TO BE BEAVER BRISTOL RED 180M.
2. LETTERING TO BE A BLACK PRINT.

DIMENSIONS ARE IN MILLIMETRES UNLESS OTHERWISE NOTED

No.	Date	Revision	App'd

Date: 1987/12/04
Scale: N.T.S.
Approved by: for The City of Calgary

WATERWORKS CONSTRUCTION

TYPICAL NOTICE TO HOUSEHOLDER SERVICE INTERRUPTION

Sheet: 48
File Number: 453.1032.001

ISC: Unrestricted

VIEW OF OPEN TRENCH AND BACKFILL MATERIAL

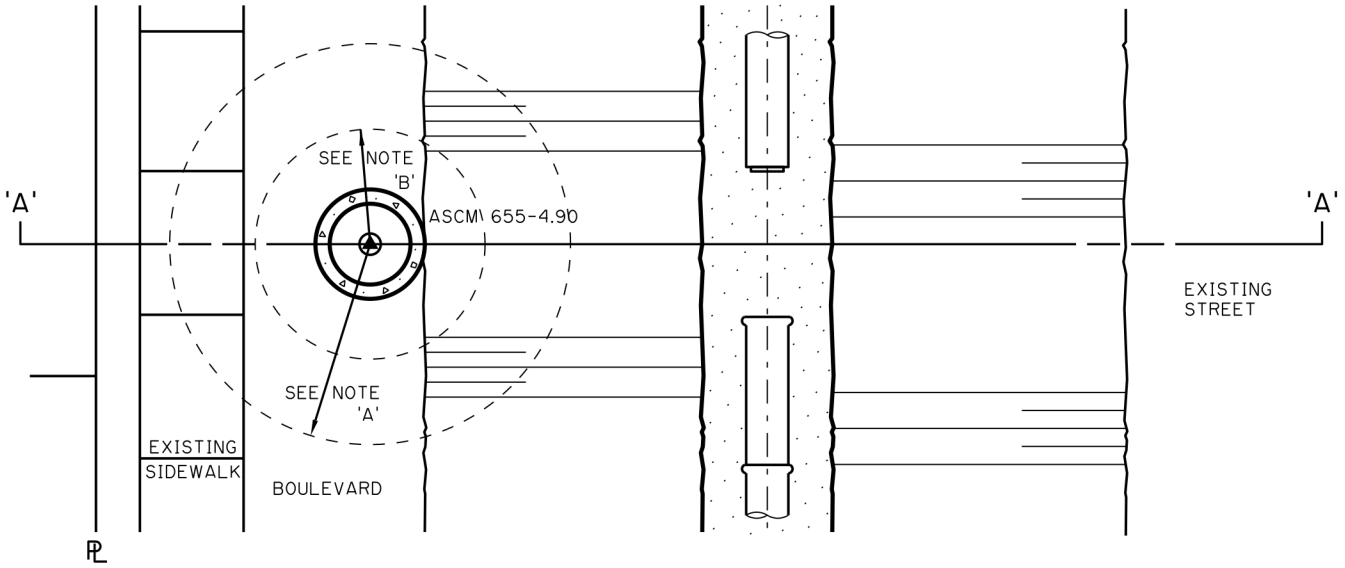

PLAN VIEW

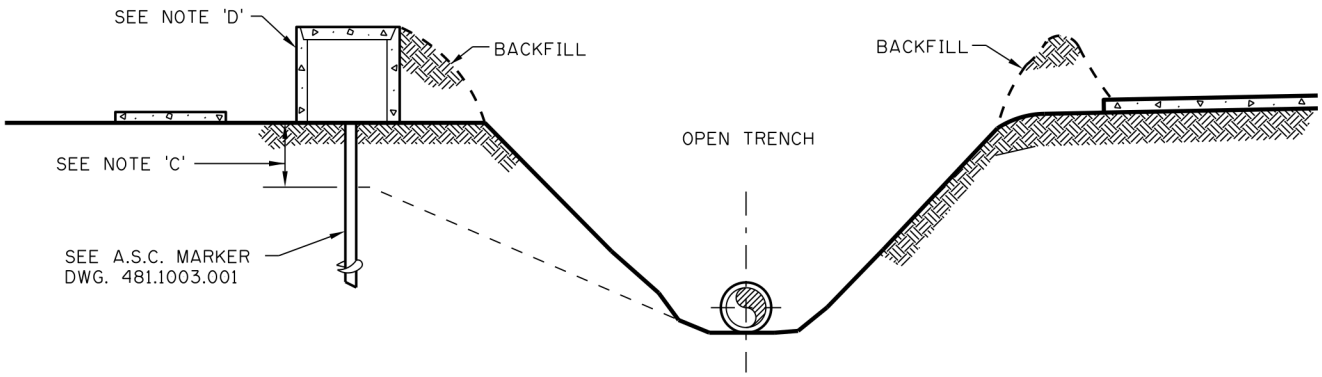

SECTION 'A-A'

NOTE

3 A. ANY CONSTRUCTION INVOLVED WITHIN 3m OF SURVEY MONUMENTATION WHICH MIGHT ENDANGER THAT MONUMENTATION, SHOULD CONTACT THE FSS-LAND SURVEYING SECTION @ (403) 268-1640, FIVE (5) WORKING DAYS IN ADVANCE FOR LOCATION, AND AFTER THE WORK IS COMPLETED FOR POSSIBLE MOVEMENT.

B. IF TRENCH WORK IS GOING TO BE CLOSER THAN 1.5m, REMOVAL AND BACKFILLING, MUST BE CARRIED OUT MANUALLY.

C. NOT MORE THAN 0.30m OF A SURVEY CONTROL MONUMENT IS TO BE EXPOSED. IF SO REFER TO NOTE A ABOVE.

1 D. IF THE SURVEY CONTROL MONUMENT IS GOING TO BE TEMPORARILY COVERED WITH FILL OR ANY OTHER MATERIAL, A SEWER INTERMEDIATE BARREL & LID OR COVER (SEE SHEET #8, DWG. 452.1001.022) SHOULD BE PLACED TO PROTECT MONUMENT.

2 E. IF ANY HEAVY EQUIPMENT WORKING WITHIN 10m OF A SURVEY CONTROL MONUMENT, THE JOB FOREMAN IS REQUIRED TO LOCATE A GUARD POST AND A SEWER INTERMEDIATE BARREL (SEE NOTE 'D'), TO PROTECT THE SURVEY CONTROL MONUMENT DURING CONSTRUCTION.

DIMENSIONS ARE IN MILLIMETRES UNLESS OTHERWISE NOTED

No.	Date	Revision	App'd
3	2016/07/13	REVISED NOTE A	M.C.
2	2004/12/13	REVISED NOTE E	
1	2004/11/23	REVISED NOTE D	

Date 2004/11/01
Scale N.T.S.
Approved by for The City of Calgary

THE CITY OF CALGARY WATERWORKS CONSTRUCTION

ALBERTA SURVEY CONTROL MONUMENT PROTECTION STANDARD

Sheet 49

File Number 481.1002.001

ISC: Unrestricted

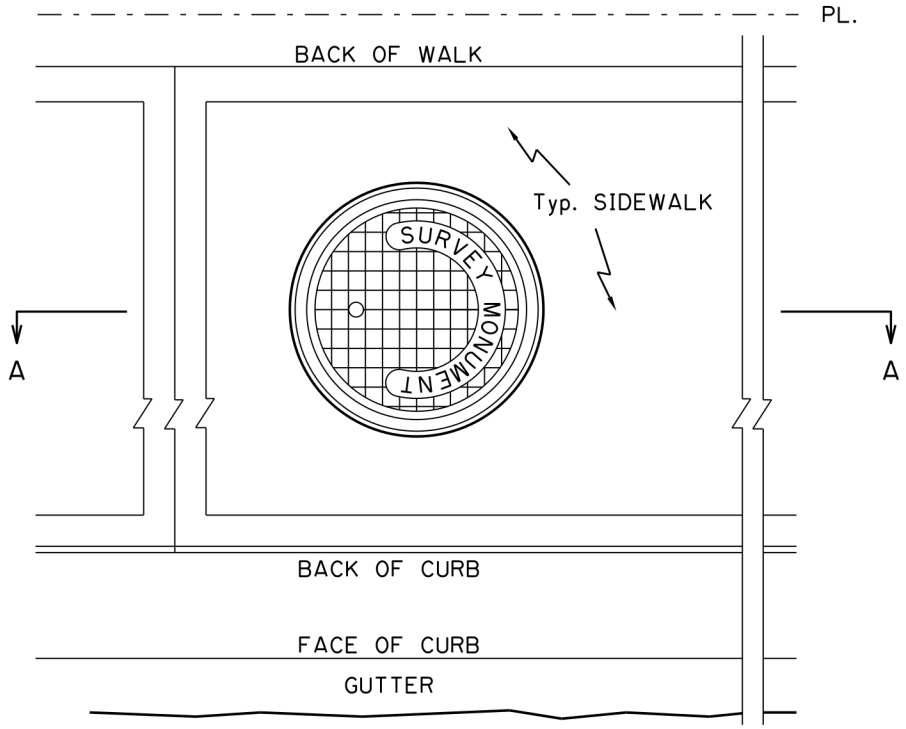

MANHOLE INSTALLATION
PLAN VIEW

0 50 100 200 300

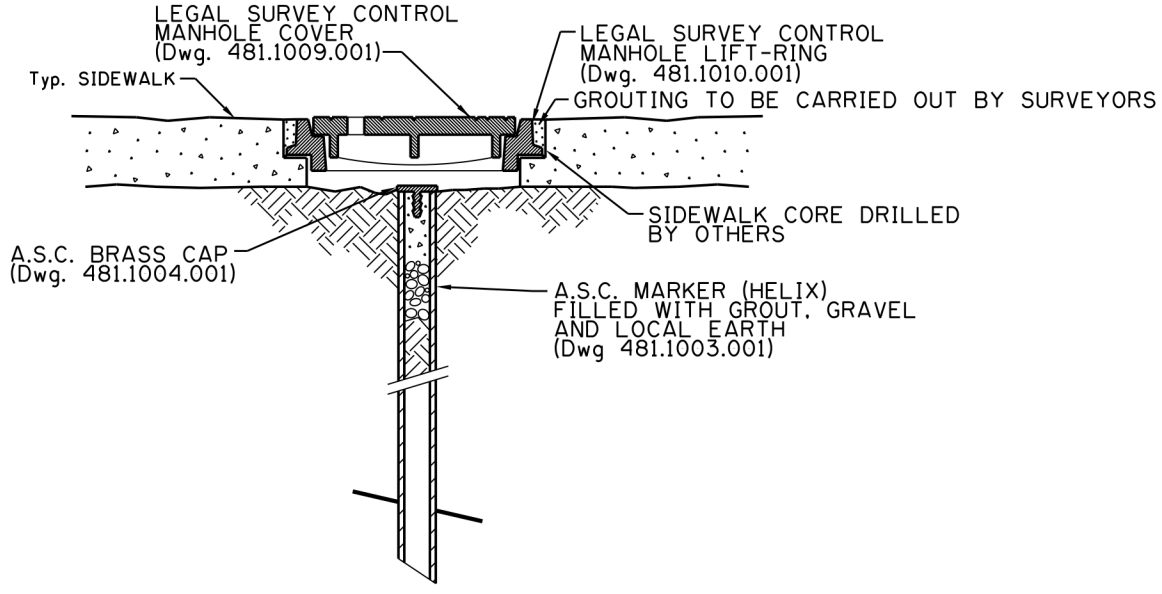

SECTION 'A-A'

0 50 100 200 300

DIMENSIONS ARE IN MILLIMETRES
UNLESS OTHERWISE NOTED

No.	Date	Revision	App'd

Date
1985/10/01

Scale
N.T.S.

Approved by
for The City of Calgary

THE CITY OF CALGARY
WATERWORKS CONSTRUCTION

LEGAL SURVEY CONTROL
TYPICAL SIDEWALK
MANHOLE INSTALLATION

Sheet
50

File Number
481.1007.001

ISC: Unrestricted

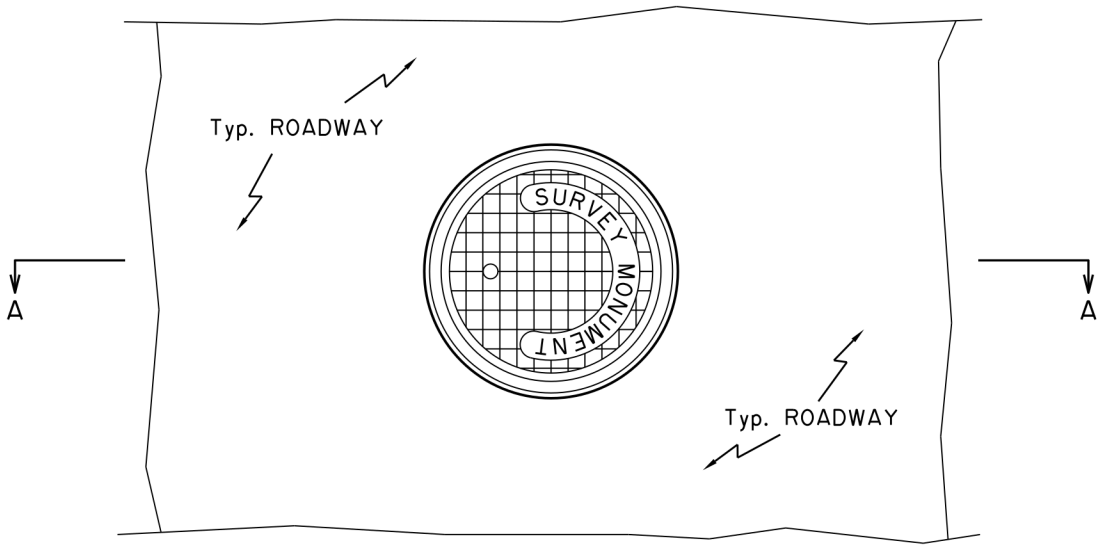

MANHOLE INSTALLATION
PLAN VIEW

0 50 100 200 300

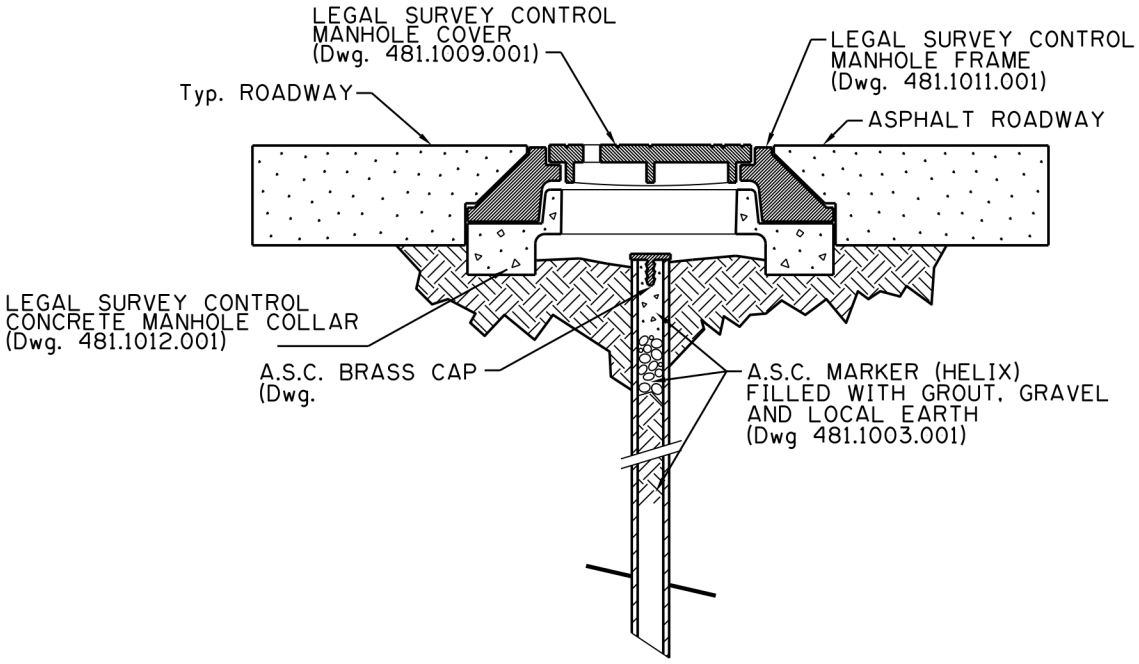

SECTION 'A-A'

0 50 100 200 300

DIMENSIONS ARE IN MILLIMETRES
UNLESS OTHERWISE NOTED

No.	Date	Revision	App'd

Date: 1985/10/02
Scale: N.T.S.
Approved by: for The City of Calgary

THE CITY OF CALGARY — WATERWORKS CONSTRUCTION

LEGAL SURVEY CONTROL
TYPICAL ROADWAY
MANHOLE INSTALLATION

Sheet: 51
File Number: 481.1008.001

ISC: Unrestricted

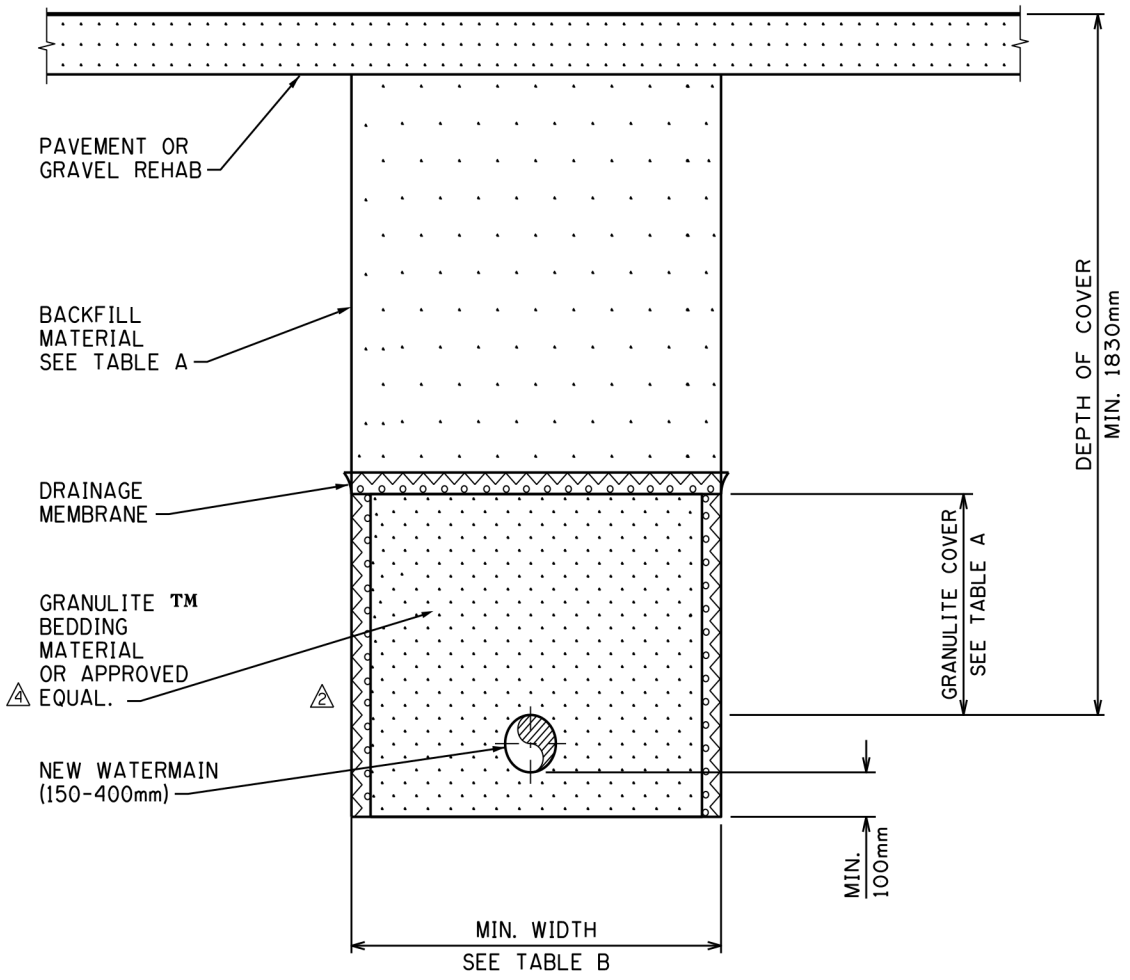

NOTES:

1. MAIN REPLACEMENT PROJECTS. SEE SEC. 504.04.16.
2. DRAINAGE MEMBRANE. SEE SEC. 319 STD. SPEC. ROADS CONSTRUCTION. 3
3. DRAINAGE MEMBRANE ON EACH SIDE OF THE TRENCH IS REQUIRED ONLY IF BACKFILL MATERIAL IS WASHED GRAVEL.
4. CONTROL DENSITY FILL. SEE SEC 304 STD. SPEC. STREETS CONSTRUCTION.

TABLE A

TYPE OF BACKFILL	GRANULITE COVER
CLAY	930mm
GRANULAR OR CONTROL DENSITY FILL	1030mm

TABLE B

PIPE SIZE (mm)	150-300	400
MIN. TRENCH WIDTH (mm)	1220	1320

DIMENSIONS ARE IN MILLIMETRES
UNLESS OTHERWISE NOTED

No.	Date	Revision	App'd
4	2012/12/27	REVISED NOTE	B.N.
3	2010/11/21	REVISED NOTE No. 2	B.N.
2	2007/10/01	REPOSITION DRAINAGE MEMBRANE	B.N.
1	2006/02/15	REVISED TITLE	E.P.

Date 1995/12/05
Scale N.T.S.
Approved by
for The City of Calgary

THE CITY OF CALGARY WATERWORKS CONSTRUCTION

WATERMAIN REPLACEMENT AT REDUCED DEPTH

1 CONSTRUCTION USING GRANULITE ™ INSULATION MATERIAL

Sheet 52

File Number 453.5003.011

ISC: Unrestricted

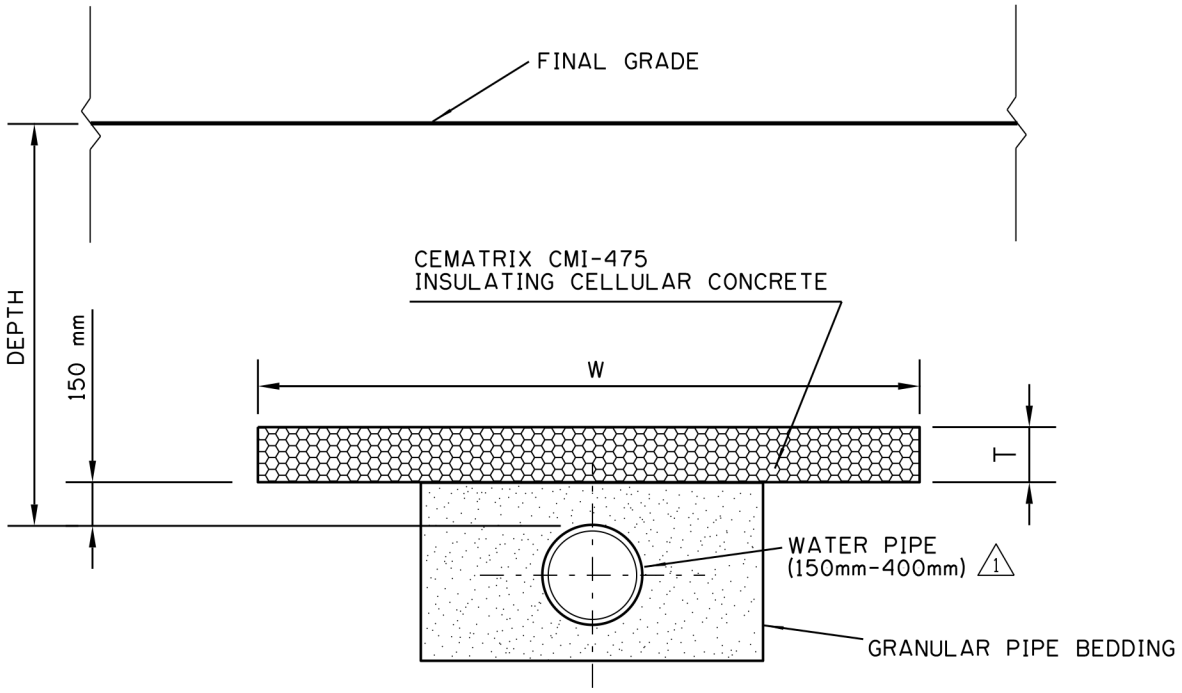

DEPTH (m)	CLAYS	
	LOOPED MAINS/SERVICES	
	W (m)	T (mm)
1.6-1.8	2.6	225
1.8-2.0	2.4	175
2.0-2.2	1.8	150
2.2-2.4	1.4	125
2.4-2.7	1.2	100

DEPTH (m)	CLAYS		GRAVELS		MIXTURE CLAY & GRAVEL	
	DEAD END MAINS/SERVICES, HYDRANT LEADS		ALL INSTALLATIONS		ALL INSTALLATIONS	
	W (m)	T (mm)	W (m)	T (mm)	W (m)	T (mm)
1.6-1.8	3.4	225	4.0	275	3.4	225
1.8-2.0	3.0	200	3.6	250	3.0	200
2.0-2.2	2.4	175	3.2	225	2.4	175
2.2-2.4	2.0	150	2.8	200	2.0	150
2.4-2.6	1.6	125	2.3	175	1.6	125
2.6-2.8	1.4	100	1.8	150	1.4	100
2.8-3.0	1.2	100	1.4	125	1.2	100
3.0-3.3	---	---	1.2	100	---	---

NOTES:

1. DENSITY OF CEMATRIX CMI-475 INSULATING CELLULAR CONCRETE = 475 kg/cu.m
2. CEMATRIX SHOULD BE CONTACTED FOR SITE SPECIFIC DESIGNS WHERE SPACE IS LIMITED OR WHERE PIPES HAVE LESS THAN 1.6 m SOIL COVER.
3. APPROVAL REQUIRED AS PER SEC. 504.04.15 WATERWORKS SPECIFICATIONS

DIMENSIONS ARE IN MILLIMETRES
UNLESS OTHERWISE NOTED

No.	Date	Revision	App'd
1	2012/01/19	ADDED WATER PIPE SIZE	BN

Date 2004/03/22
Scale N.T.S.
Approved by for The City of Calgary

THE CITY OF CALGARY WATERWORKS CONSTRUCTION

CELLULAR CONCRETE INSULATION - HORIZONTAL LAYER

Sheet 53

File Number 453.1042.001

ISC: Unrestricted

CROSS SECTION OF CELLULAR CONCRETE INSULATION - PIPE SURROUND

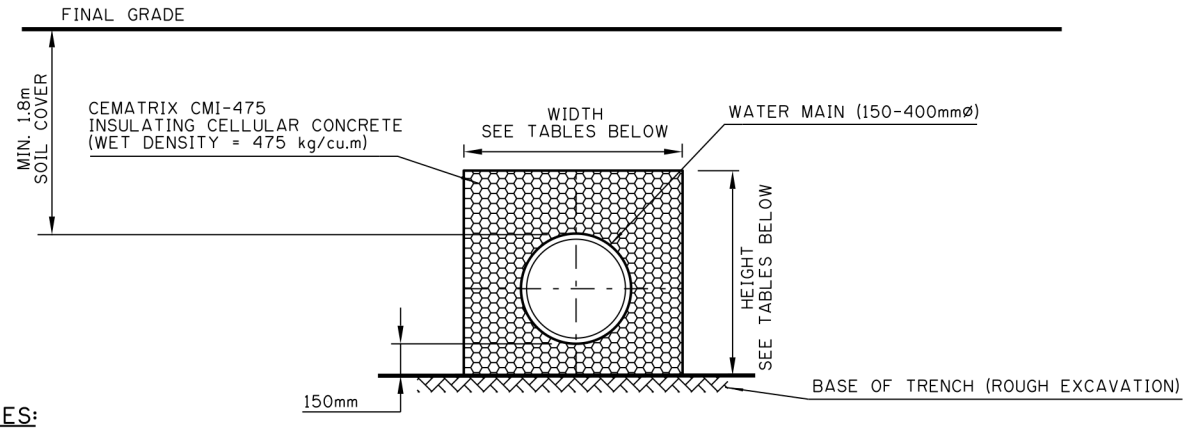

3 NOTES:

- USE CELLULAR CONCRETE HORIZONTAL LAYER INSULATION WHERE PIPE FLOW IS CONTINUALLY STAGNANT.
- DRAINAGE MEMBRANE NOT REQUIRED.
- FORMWORK TO BE CONSTRUCTED BY THE CONTRACTOR AS REQUIRED.
- APPROVAL REQUIRED AS PER SEC. 504.04.15 CURRENT STANDARD SPECIFICATIONS WATERWORKS CONSTRUCTION.
- 2 PLY OF 0.15mm POLYETHYLENE SHALL BE PLACED BETWEEN PIPE AND CEMATRIX
- MINIMUM 28 DAY COMPRESSIVE STRENGTH = 400 KPa. 2

1

Cellular Concrete Insulation for Clay Soil

Looped Mains and Services						
	Width (mm)			Height (mm)		
Cover (m)	100 to 200mm	250 to 300mm	350 to 400mm	100 to 200mm	250 to 300mm	350 to 400mm
1.8 - 2.0	900	1000	1100	775	800	825
2.0 - 2.2	900	950	1000	725	750	800
2.2 - 2.4	900	900	900	650	700	750
2.4 - 2.7	800	900	900	575	650	750
Dead End Mains and Services, Hydrant Leads						
1.8 - 2.0	1100	1150	1200	900	900	900
2.0 - 2.2	1000	1050	1100	725	825	900
2.2 - 2.4	1000	1025	1050	675	750	825
2.4 - 2.6	850	900	950	600	675	750
2.6 - 3.0	800	875	950	600	675	750

1

Cellular Concrete Insulation for Gravel

	Width (mm)			Height (mm)		
Cover (m)	100 to 200mm	250 to 300mm	350 to 400mm	100 to 200mm	250 to 300mm	350 to 400mm
1.8 - 2.0	1350	1400	1450	975	1000	1025
2.0 - 2.2	1250	1300	1350	900	925	950
2.2 - 2.4	1150	1150	1150	900	900	900
2.4 - 2.6	1050	1050	1050	800	800	825
2.6 - 2.8	950	950	950	750	775	800
2.8 - 3.0	850	900	950	600	675	750
3.0 - 3.3	800	875	950	525	650	750

1

Cellular Concrete Insulation for Mixture of Clay and Gravel

	Width (mm)			Height (mm)		
Cover (m)	100 to 200mm	250 to 300mm	350 to 400mm	100 to 200mm	250 to 300mm	350 to 400mm
1.8 - 2.0	1100	1150	1200	900	900	900
2.0 - 2.2	1000	1050	1100	725	825	900
2.2 - 2.4	1000	1025	1050	675	750	825
2.4 - 2.6	850	900	950	600	675	750
2.6 - 3.0	800	875	950	600	675	750

DETAIL 'A' - CEMATRIX CMI-475 INSULATING CELLULAR CONCRETE PIPE SUPPORTS

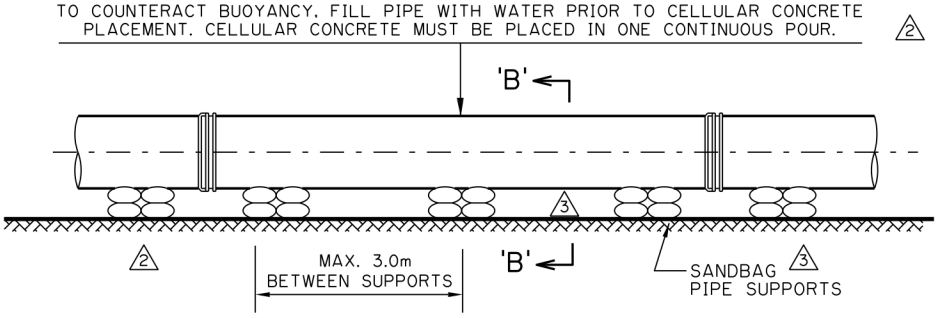

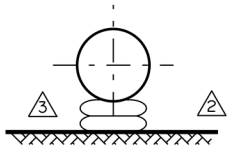

SECTION 'B-B'

DIMENSIONS ARE IN MILLIMETRES UNLESS OTHERWISE NOTED

No.	Date	Revision	App'd
3	2017/01/30	REVISED NOTE. DELETED NOTE. REVISED DETAIL	BN
2	2015/12/16	CHANGED NOTES & PIPE SUPPORTS	BN
1	2009/03/18	CHANGED DEPTH TO COVER (TEXT)	BD

Date 2004/03/22
Scale N.T.S.
Approved by
for The City of Calgary

THE CITY OF CALGARY WATERWORKS CONSTRUCTION

CELLULAR CONCRETE INSULATION PIPE SURROUND

Sheet 54

File Number 453.1041.001

ISC: Unrestricted

HYDRANT CONNECTION UNIT (HCU) OPTIONS 5 7

AIR GAP EQUIPPED WATER HAULING TRUCK WITH METER BOX (METER BOX FROM THE CITY)

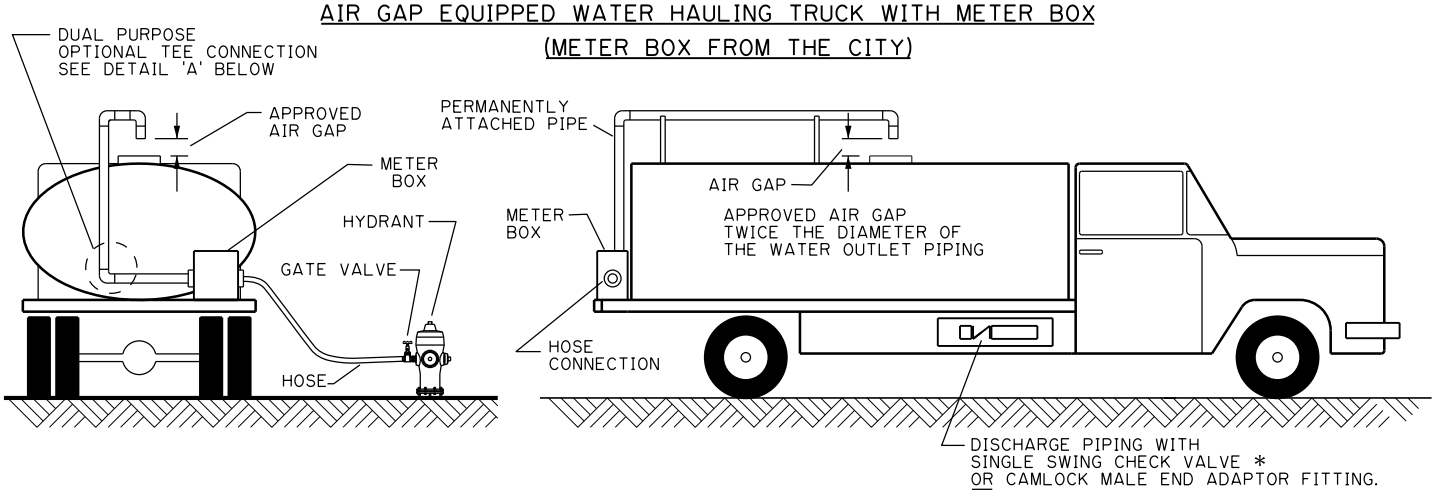

1. METER BOX TO BE INSTALLED HORIZONTALLY AND WHERE IT IS PROTECTED FROM DAMAGE. 6
2. APPROVED SINGLE CHECK VALVE TO BE INSTALLED IN AN ACCESSIBLE LOCATION.
   (* SWING CHECK VALVE TO BE INSTALLED HORIZONTALLY.)
3. FOR AN INSPECTION FOR AN HCU ON A UNIT, CALL 311 AND REQUEST AN AIR GAP INSPECTION 9 7
4. FOR HCU REPAIR CONTACT METERS SHOP AT 268-1215.

DUAL PURPOSE OPTIONAL TEE CONNECTION DETAIL 'A'

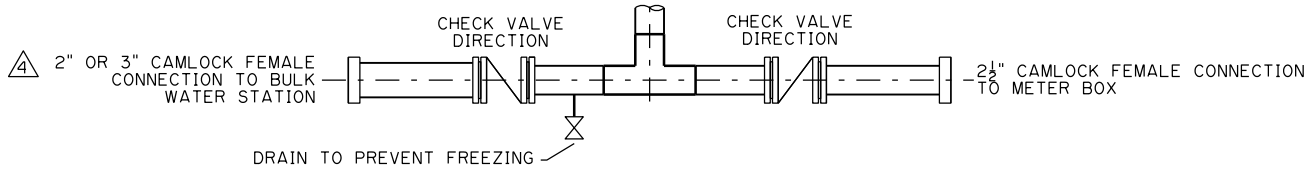

WATER HAULING TRUCK WITH BACKFLOW & METER ASSEMBLY UNIT (BMA UNIT FROM THE CITY)

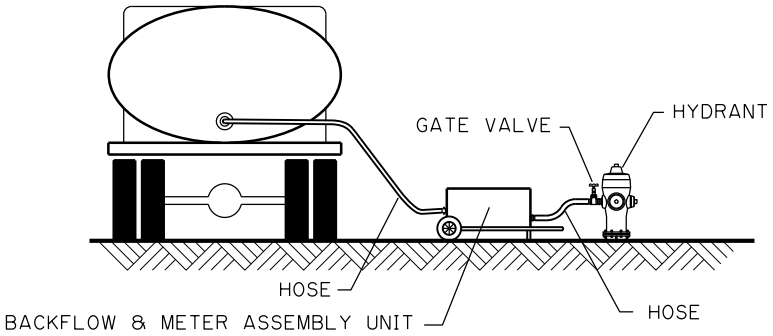

1. BMA UNIT MAY BE TEMPORARILY MOUNTED ON VEHICLE WHERE IT IS PROTECTED FROM DAMAGE.

REFERENCE DOCUMENTS:

5 1. "NOTICE TO HYDRANT USERS" (LATEST EDITION)

2. REFERENCE GUIDE TO BULK WATER STATIONS (LATEST EDITION)

4 3. CURRENT STANDARD SPECIFICATIONS WATERWORKS CONSTRUCTION. SECTION 504.13.00 PERMISSION TO USE WATER FOR CONSTRUCTION

8 4. WATERWORKS BYLAW NUMBER 40M2006

7 5 FOR RENTAL OF A HYDRANT CONNECTION UNIT CONTACT:

7 THE CITY OF CALGARY - WATER SERVICES
TELEPHONE 268-4416 OR 268-4712

DIMENSIONS ARE IN MILLIMETRES
UNLESS OTHERWISE NOTED

No.	Date	Revision	App'd
9	2022/03/09	REVISED NOTE	D.N.
8	2009/02/25	REVISED NOTE N°4	B.N.
7	2009/02/25	REVISED & ADDED NOTE	B.N.
6	2008/10/16	REVISED NOTE No. 1	B.N.
5	2004/03/23	ADDED MAIN TITLE & REVISED TEXT	B.N.
4	2003/03/06	REVISED SIZE OF CONNECTION	B.N.

Date 2002/03/11
Scale N.T.S.
Approved by
for The City of Calgary

WATERWORKS CONSTRUCTION

TEMPORARY HYDRANT CONNECTIONS FOR WATER HAULING TRUCK

Sheet 55
File Number 453.1026.003

ISC: Unrestricted

NOTES:

1. AT LEAST ONE PLUG IS REQ'D IN EACH PHASE OF A SUBDIVISION. AT THE LOWEST POINT IN THE STORM SEWER SYSTEM.
2. GROUNDWATER PLUGS SHALL BE SUITABLE CLAY OR CONTROL DENSITY FILL AS PER ROADS CONSTRUCTION STANDARD 304.05.00

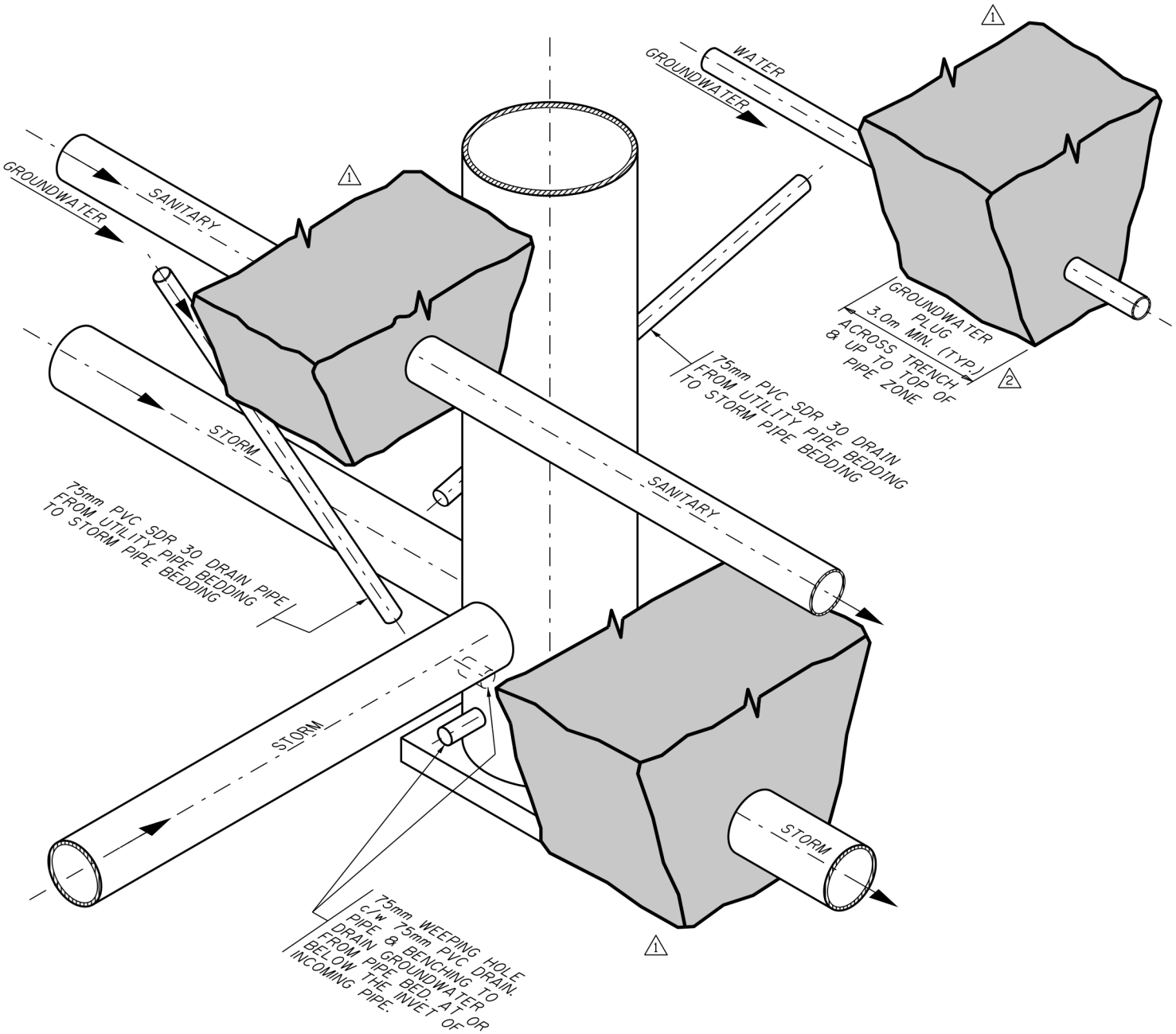

DIMENSIONS ARE IN MILLIMETRES UNLESS OTHERWISE NOTED

No.	Date	Revision	App'd
2	2017/12/27	MODIFIED NOTES	B.N.
1	2000/02/15	ADD SHADING	B.N.

Date 1992/01/01
Scale N.T.S.
Approved by for The City of Calgary

WATERWORKS CONSTRUCTION

CLAY PLUGS & WEEPING HOLES AT STORM MANHOLES

Sheet 56
File Number 452.1005.006

ISC: Unrestricted

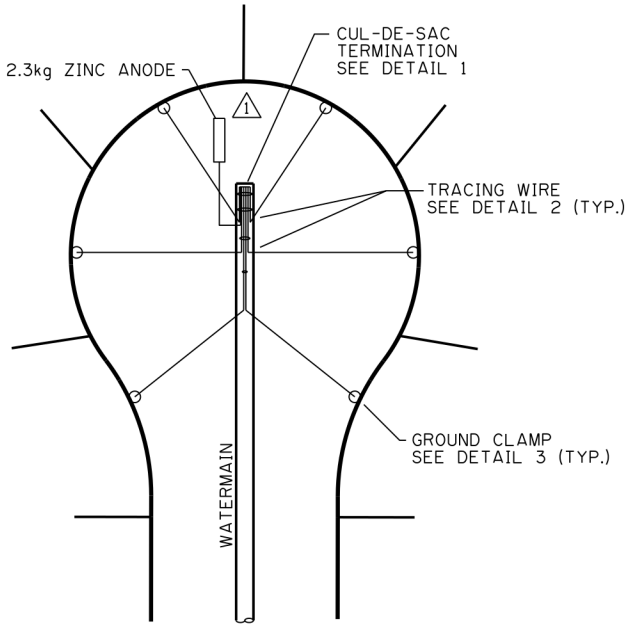

TYPICAL CUL-DE-SAC LAYOUT

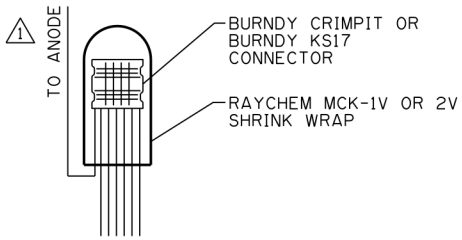

1 CUL-DE-SAC TERMINATION DETAIL

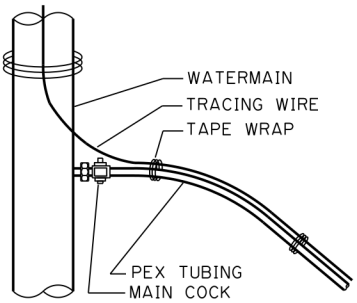

2 CUL-DE-SAC TRACING WIRE DETAIL

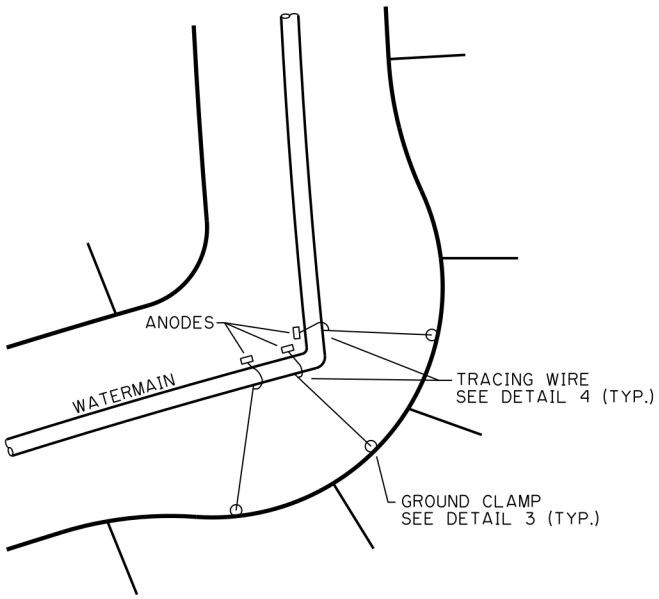

TYPICAL CURVE/BAY LAYOUT

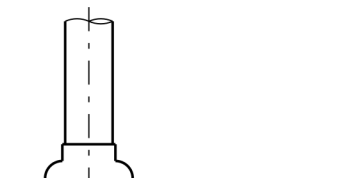

3 GROUND CLAMP DETAIL

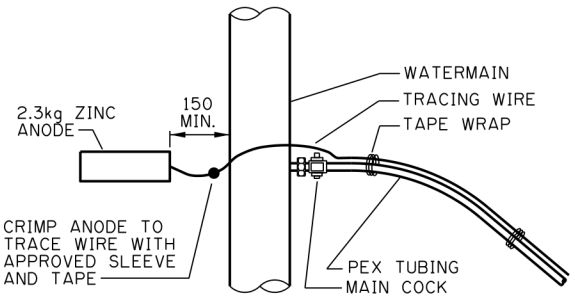

4 CURVE/BAY TRACING WIRE DETAIL

NOTES:

1. PEX SERVICES THAT CANNOT BE LAID PERPENDICULAR TO THE MAIN (ie. ON CURVES OR BAYS) SHALL BE EQUIPPED WITH TRACE WIRES TERMINATING WITH A ZINC ANODE AS SHOWN.
2. RUN TRACING WIRE AWG #10-7 STRAND RWU-90 (BLUE) ALONG THE TOP OF EACH SERVICE TUBE AND WATERMAIN. TAPE WRAP WIRE A MINIMUM OF EVERY 2 METRES.
3. TRACING WIRES AT THE TERMINATION POINT ARE TO BE STRIPPED TO MATCH THE APPROPRIATELY SIZED BURNDY CRIMP CONNECTOR AND CRIMPED WITH AN APPROVED TOOL. THE COMPLETED TERMINATION IS TO BE PROTECTED WITH A RAYCHEM MCK-1V OR 2V HEAT SHRINK KIT OR APPROVED EQUAL AND SECURED WITHIN 150mm OF THE END PLUG.

DIMENSIONS ARE IN MILLIMETRES UNLESS OTHERWISE NOTED

No.	Date	Revision	App'd
1	2018/04/30	REVISED NOTE FOR WIRE SIZE AND ADDED ANODE TO DETAIL	BN

Date: 1999/09/28
Scale: N.T.S.
Approved by: for The City of Calgary

WATERWORKS CONSTRUCTION

TRACING WIRE LAYOUTS FOR CROSS LINKED POLYETHYLENE (PEX) SERVICES

Sheet: 57
File Number: 453.1031.003

ISC: Unrestricted

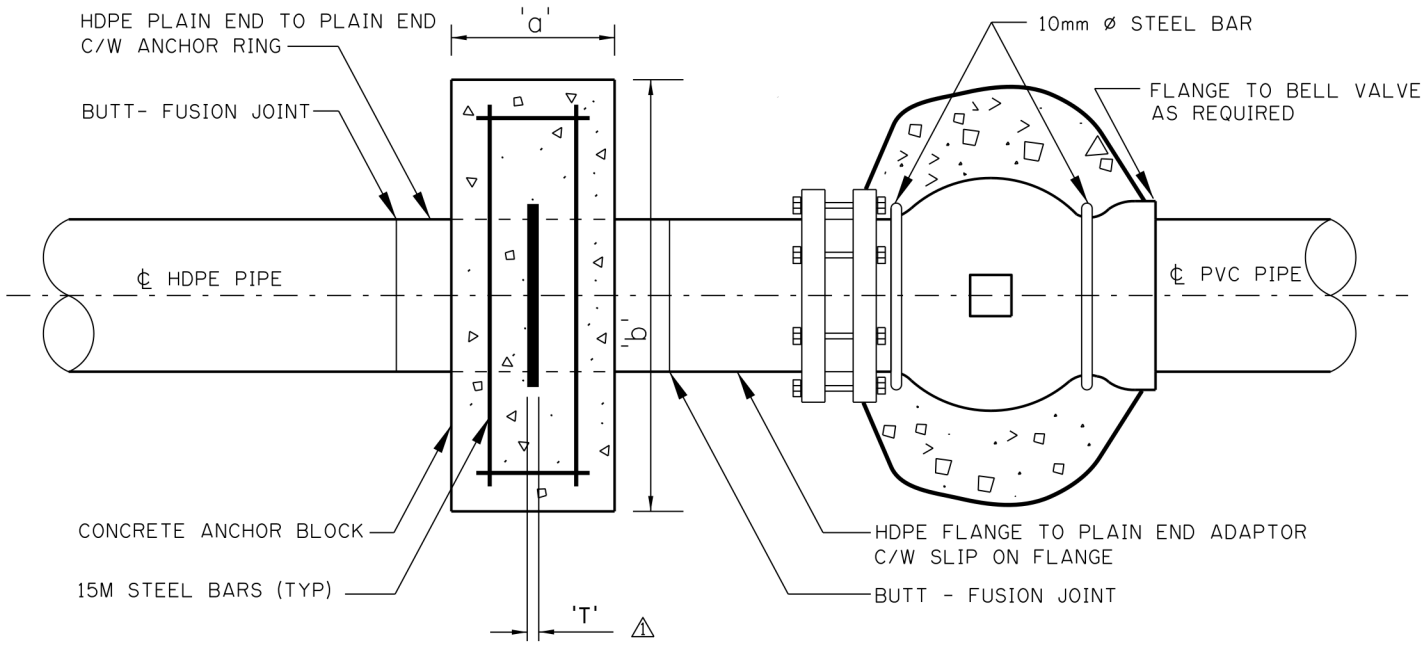

⚠

SIZE	OD (MIN)	T (MIN)
150	210	17
200	263	22
250	320	27
300	381	32
400	496	40

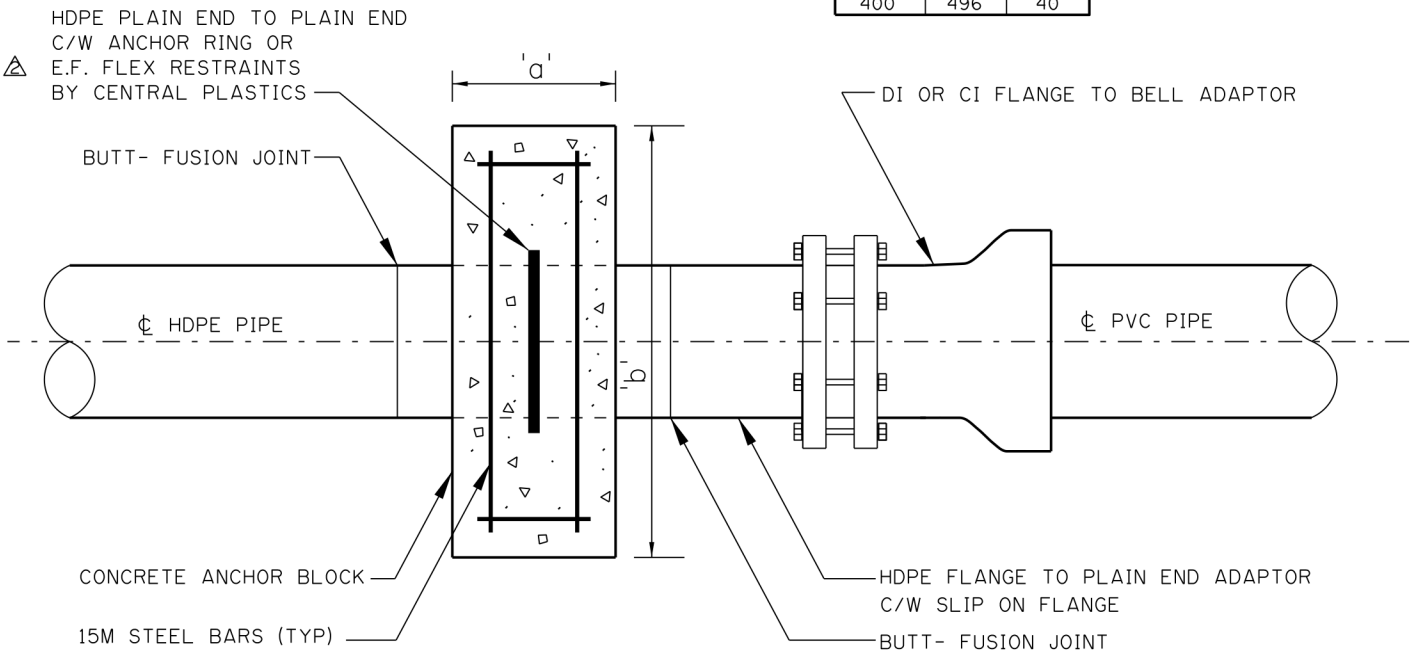

NOTES:

* DIMENSIONS OF ANCHOR BLOCK AND MINIMUM BEARING AREA AGAINST UNDISTURBED GROUND TO BE PROVIDED & CERTIFIED BY A PROFESSIONAL ENGINEER.

⚠ * THE ANCHOR RING SHALL BE HEAT MOULDED (THERMO-FORMED WITH THE PIPE) FILLET WELD IS NOT ACCEPTABLE.

DIMENSIONS ARE IN MILLIMETRES
UNLESS OTHERWISE NOTED

No.	Date	Revision	App'd
2	2009/12/10	REVISE LABEL	B.N.
1	2001/02/13	ADDED NOTE. ADDED DIM. & TABLE	E.P.

Date 1999/02/09
Scale N.T.S.
Approved by
for The City of Calgary

THE CITY OF CALGARY WATERWORKS CONSTRUCTION

POLYETHYLENE PIPE RESTRAINT

Sheet 58
File Number 453.1031.004

ISC: Unrestricted



NOTE:

- THE BACKGROUND IS TO BE WHITE

DIMENSIONS ARE IN MILLIMETRES
UNLESS OTHERWISE NOTED

No.	Date	Revision	App'd
2	2018/02/05	REVISED TITLE FOR SIGN & MODIFIED SPACE FOR LOGO	M.C.
1	2016/07/28	REVISED CITY LOGO AND SIGN	M.C.

Date: 2001/04/10
Scale: N.T.S.
Approved by: for The City of Calgary

WATERWORKS CONSTRUCTION

PORTABLE OR
FREE STANDING
CONSTRUCTION SIGN

Sheet: 59
File Number: 453.1018.001

ISC: Unrestricted

DRAWING DELETED: Sheet 60 no longer applicable.

Please contact Project Manager for Major Project Sign information.

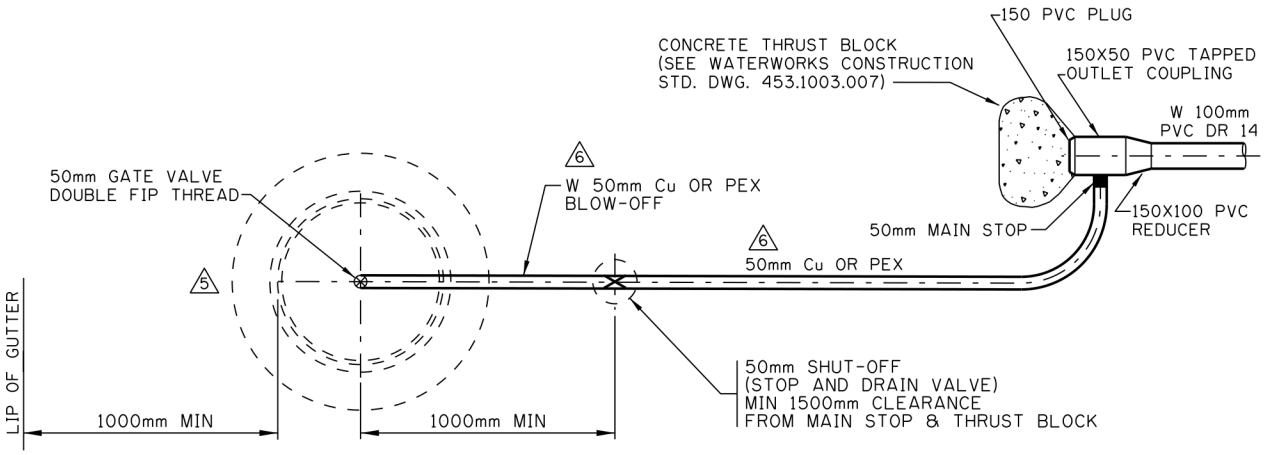

PLAN VIEW

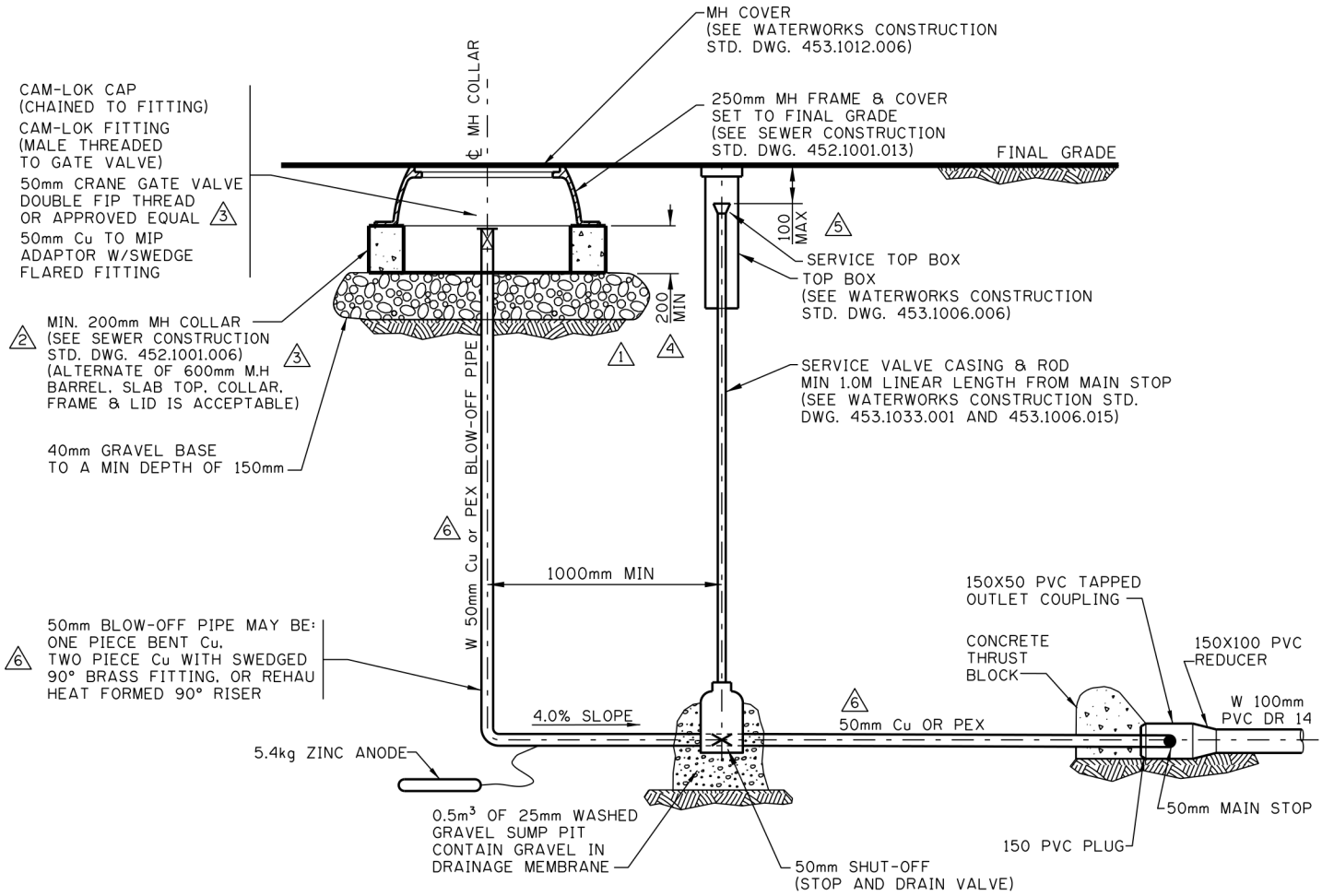

PROFILE VIEW

NOTE:

1. LENGTH OF Cu NOT TO EXCEED 6.0m
2. POSITION OF DEVICE RELATIVE TO MAIN MAY VARY
3. FLUSHING ASSEMBLY SHALL NOT CROSS SANITARY AND STORM MAINS
3 4. ALL FITTINGS ON VERTICAL BLOWOFF PIPE SHALL BE SWEDGED OR THREADED

DIMENSIONS ARE IN MILLIMETRES
UNLESS OTHERWISE NOTED

No.	Date	Revision	App'd
6	2019/09/05	REVISED TEXT & ADDED NOTE	B.N.
5	2017/01/10	ADDED NOTE, DIMENSION AND MODIFIED DETAIL	B.N.
4	2012/12/27	LOWER GRAVEL FILL & REVISE DIMENSION TO 200	B.N.
3	2008/01/02	REVISED TEXT & ADDED NOTE	B.N.
2	2007/09/01	REVISED TEXT	B.N.
1	2006/06/22	LOWER GATE VALVE & GRAVEL FILL	B.N.

Date: 2005/05/01
Scale: N.T.S
Approved by: for The City of Calgary

WATERWORKS CONSTRUCTION

6 50mm FLUSHING ASSEMBLY TYPE "A"

Sheet: 61A
File Number: 453.1043.001

ISC: Unrestricted

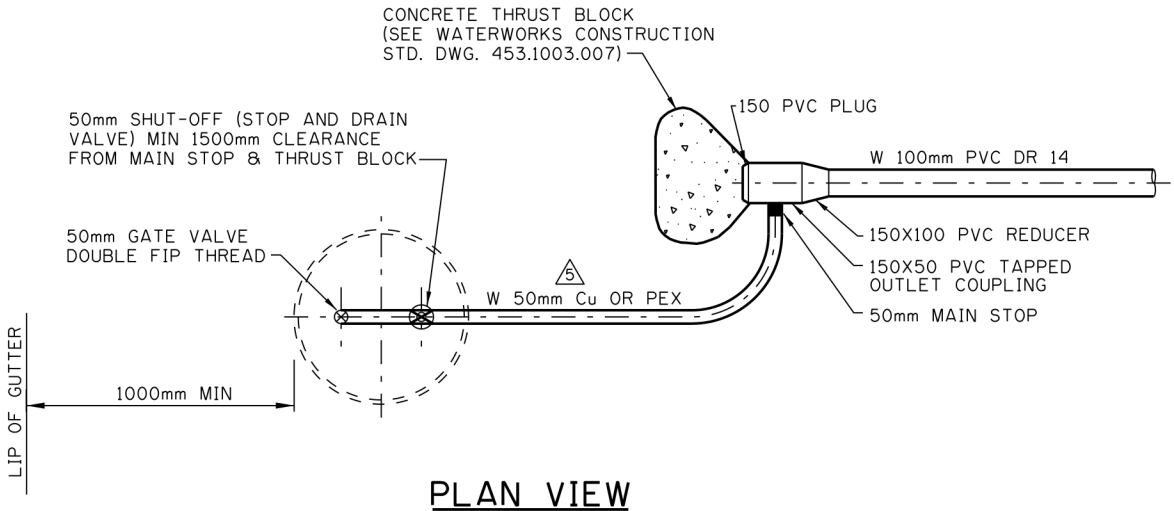

PLAN VIEW

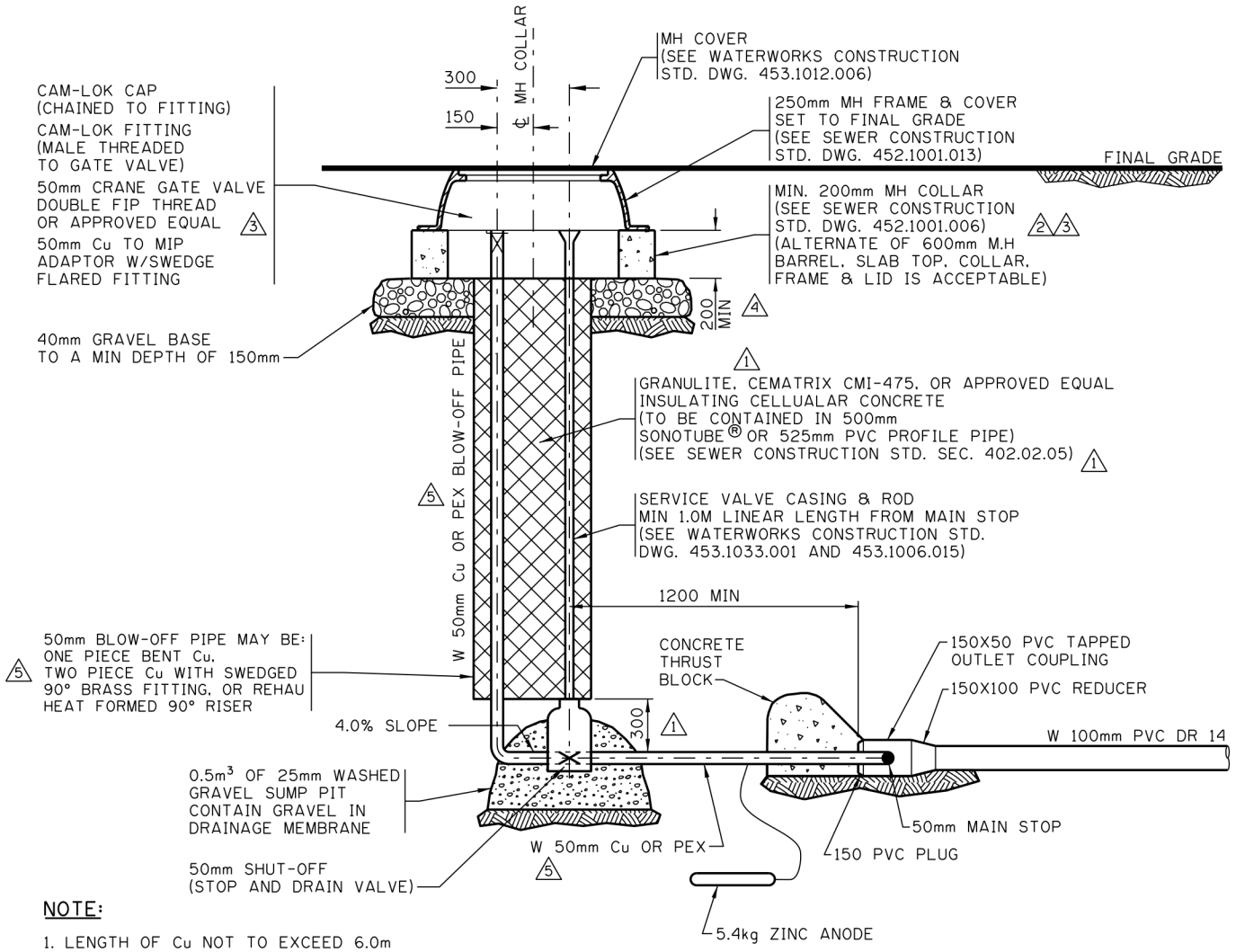

PROFILE VIEW

NOTE:

1. LENGTH OF Cu NOT TO EXCEED 6.0m
2. POSITION OF DEVICE RELATIVE TO MAIN MAY VARY
3. FLUSHING ASSEMBLY SHALL NOT CROSS SANITARY AND STORM MAINS
3 4. ALL FITTINGS ON VERTICAL BLOWOFF PIPE SHALL BE SWEDGED OR THREADED

DIMENSIONS ARE IN MILLIMETRES
UNLESS OTHERWISE NOTED

No.	Date	Revision	App'd
5	2019/09/05	REVISED TEXT & ADDED NOTE	BN
4	2012/12/27	REVISED DIM. TO 200 & LOWER GRAVEL FILL AND TUBE HEIGHT	BN
3	2008/02/01	REVISED TEXT & ADDED NOTE	BN
2	2007/01/09	REVISED TEXT	BN
1	2006/06/15	REVISED SIZE & POSITION OF SONOTUBE & RAISED GRAVEL FILL	BN

Date 2012/04/01
Scale N.T.S.
Approved by
for The City of Calgary

WATERWORKS CONSTRUCTION

5 50mm FLUSHING ASSEMBLY TYPE "B"

Sheet 61B

File Number 453.1043.002

ISC: Unrestricted

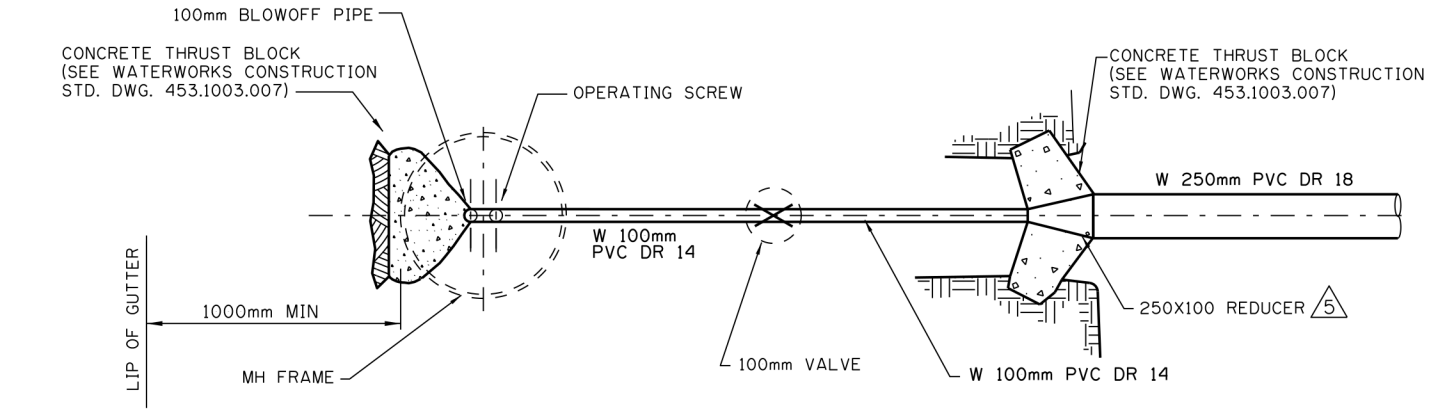

PLAN VIEW

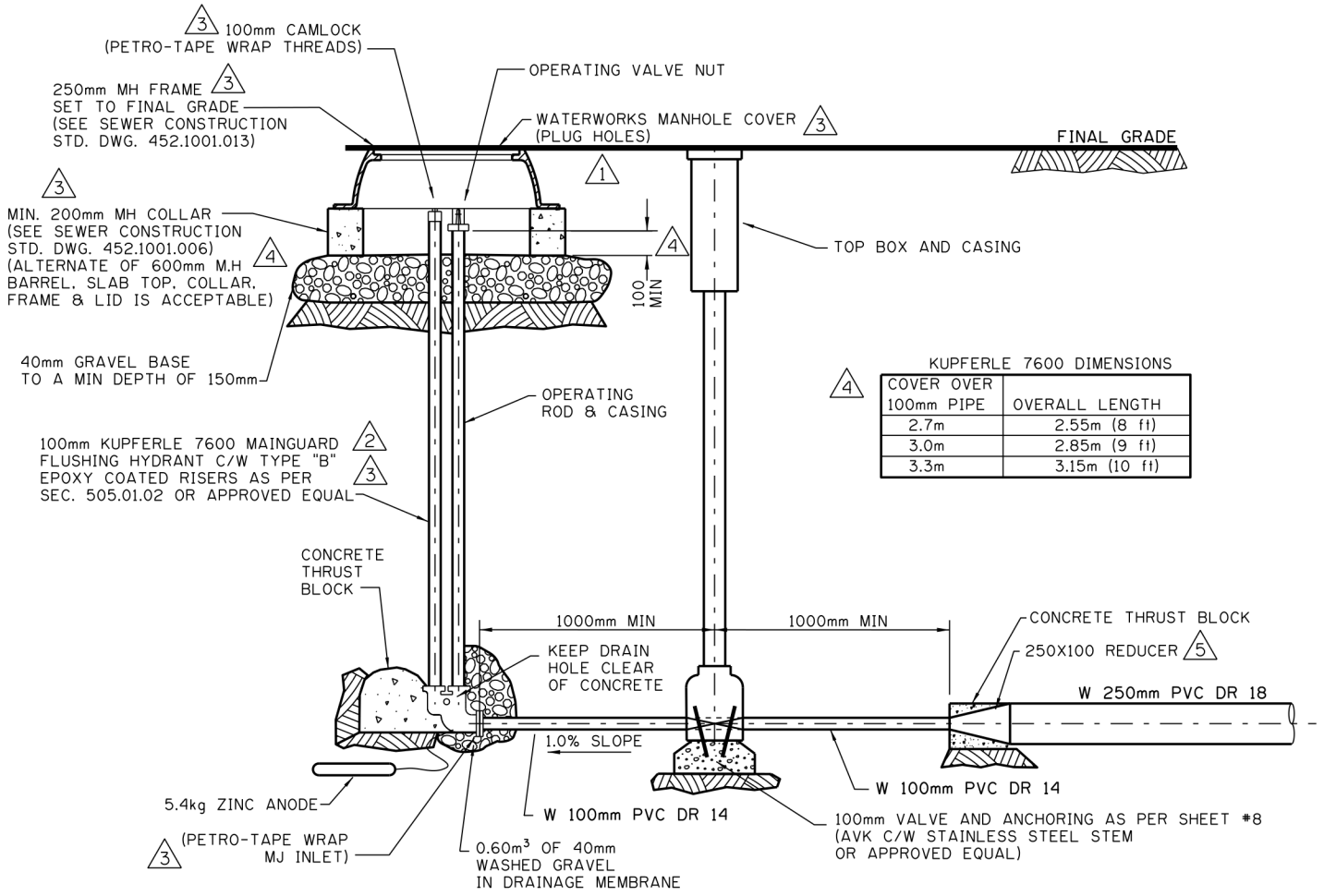

4 KUPFERLE 7600 DIMENSIONS

COVER OVER 100mm PIPE	OVERALL LENGTH
2.7m	2.55m (8 ft)
3.0m	2.85m (9 ft)
3.3m	3.15m (10 ft)

PROFILE VIEW

DIMENSIONS ARE IN MILLIMETRES
UNLESS OTHERWISE NOTED

No.	Date	Revision	App'd
5	2009/10/12	REVISED LABEL	BN
4	2008/01/02	REVISED TEXT	BN
3	2007/08/01	REV.& ADDED DESCRIPTION.REV.DESIGN & ADDED TABLE	BN
2	2006/06/22	REVISED NOTE	BN
1	2006/06/22	REVISED DESIGN	BN

Date 2001/06/01
Scale N.T.S.
Approved by
for The City of Calgary

THE CITY OF CALGARY — WATERWORKS CONSTRUCTION

100mm FLUSHING ASSEMBLY TYPE "C"

Sheet 61c
File Number 453.1043.003

ISC: Unrestricted

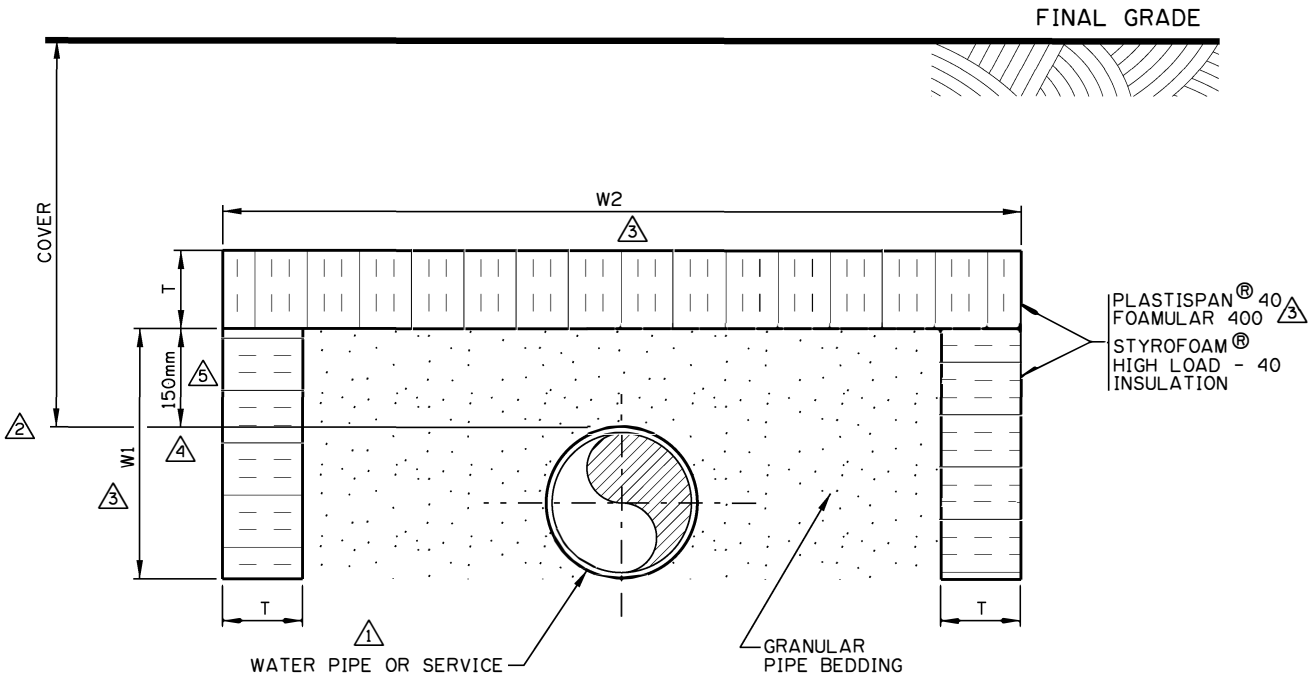

3

STYROFOAM HL40 + FOAMULAR 400

6 1

PIPE COVER [m]	MINIMUM INSULATION THICKNESS T[mm]	MINIMUM INSULATION WIDTH, W=2W1+W2 [m]									MINIMUM INSULATION THICKNESS T[mm]	MINIMUM INSULATION WIDTH W [m]		
		PIPE DIAMETER 150-200 mm			PIPE DIAMETER 250-300 mm			PIPE DIAMETER 400 mm				SERVICES, HYDRANT LEADS, DEAD END MAINS		
		CLAY	MIX	GRAVEL	CLAY	MIX	GRAVEL	CLAY	MIX	GRAVEL		CLAY	MIX	GRAVEL
1.6≤x<1.8	75	2.4	3.0	3.6	2.5	3.1	3.7	2.6	3.2	3.8	100	3.2	3.5	3.8
1.8≤x<2.0	50	2.0	2.6	3.2	2.1	2.7	3.3	2.4	2.8	3.4	100	2.8	3.1	3.4
2.0≤x<2.2	50	1.8	2.2	2.8	2.1	2.3	2.9	2.4	2.4	3.0	100	2.4	2.7	3.0
2.2≤x<2.4	50	1.8	1.8	2.4	2.1	2.1	2.5	2.4	2.4	2.6	75	2.0	2.3	2.6
2.4≤x<2.6	50	0.8	1.8	2.0	0.9	2.1	2.1	1.0	2.4	2.4	75	1.6	1.9	2.2
2.6≤x<2.8	50	0.4	1.8	1.8	0.5	1.1	2.1	0.6	1.2	2.4	75	1.2	1.5	1.8
2.8≤x<3.0	50	-	0.6	1.8	-	0.7	2.1	-	0.8	2.4	50	0.8	1.1	1.4
3.0≤x<3.2	50	-	-	0.8	-	-	0.9	-	-	1.0	50	-	0.7	1.0
3.2≤x≤3.3	50	-	-	0.4	-	-	0.5	-	-	0.6	50	-	-	0.6

PLASTISPAN 40 3

6

PIPE COVER [m]	PLASTISPAN 40 INSULATION THICKNESS T[mm]	MINIMUM INSULATION WIDTH, W=2W1+W2 [m]									PLASTISPAN 40 INSULATION THICKNESS T[mm]	MINIMUM INSULATION WIDTH W [m]		
		PIPE DIAMETER 150-200 mm			PIPE DIAMETER 250-300 mm			PIPE DIAMETER 400 mm				SERVICES, HYDRANT LEADS, DEAD END MAINS		
		CLAY	MIX	GRAVEL	CLAY	MIX	GRAVEL	CLAY	MIX	GRAVEL		CLAY	MIX	GRAVEL
1.6≤x<1.8	89	2.4	3.0	3.6	2.5	3.1	3.7	2.6	3.2	3.8	121	3.2	3.5	3.8
1.8≤x<2.0	64	2.0	2.6	3.2	2.1	2.7	3.3	2.4	2.8	3.4	121	2.8	3.1	3.4
2.0≤x<2.2	64	1.8	2.2	2.8	2.1	2.3	2.9	2.4	2.4	3.0	121	2.4	2.7	3.0
2.2≤x<2.4	64	1.8	1.8	2.4	2.1	2.1	2.5	2.4	2.4	2.6	89	2.0	2.3	2.6
2.4≤x<2.6	64	0.8	1.8	2.0	0.9	2.1	2.1	1.0	2.4	2.4	89	1.6	1.9	2.2
2.6≤x<2.8	64	0.4	1.8	1.8	0.5	1.1	2.1	0.6	1.2	2.4	89	1.2	1.5	1.8
2.8≤x<3.0	64	-	0.6	1.8	-	0.7	2.1	-	0.8	2.4	64	0.8	1.1	1.4
3.0≤x<3.2	64	-	-	0.8	-	-	0.9	-	-	1.0	64	-	0.7	1.0
3.2≤x≤3.3	64	-	-	0.4	-	-	0.5	-	-	0.6	64	-	-	0.6

NOTES:

3 1. APPROVED RIGID FOAM BOARDS ONLY-COMPRESSIVE STRENGTH = 40 PSI
2. MINIMUM OF 0.25m OF COMPACTED BACKFILL MATERIAL (AS PER CURRENT STANDARD SPECIFICATIONS ROADS CONSTRUCTION) IS REQUIRED OVER THE INSULATION PRIOR TO TRAFFIC LOADING
3. BOTTOM OF VERTICAL STYROFOAM® LEGS SHOULD BE LEVEL WITH BOTTOM OF PIPE
5 4. APPROVAL IS REQUIRED AS PER THE STANDARD SPECIFICATIONS WATERWORKS 504.04.15. THE CONSULTANT MAY SUBMIT ALTERNATE DESIGNS FOLLOWING THE REQUIREMENTS IN 504.04.15.
5. WHERE PIPE IS INSTALLED IN SOLID ROCK, PIPE IS TO BE BOXED IN COMPLETELY. PRIOR APPROVAL IS REQUIRED FOR SUCH INSTALLATIONS.

DIMENSIONS ARE IN MILLIMETRES UNLESS OTHERWISE NOTED

No.	Date	Revision	App'd
6	2022/03/31	REVISED NOTES	D.N
5	2020/04/21	REVISED NOTE & DIMENSION	D.N
4	2019/08/29	REVISED DIMENSION	B.N.
3	2015/10/28	REVISED NOTES & STANDARD UPDATE	B.N.
2	2009/03/18	REVISED COVER LOCATION	B.N.
1	2007/12/19	ADDED NOTE & TABLE	B.N.

Date 2001/11/06
Scale N.T.S.
Approved by for The City of Calgary

WATERWORKS CONSTRUCTION

RIGID FOAM BOARD INSULATION INVERTED U 3

Sheet 62
File Number 453.1044.001

ISC: Unrestricted

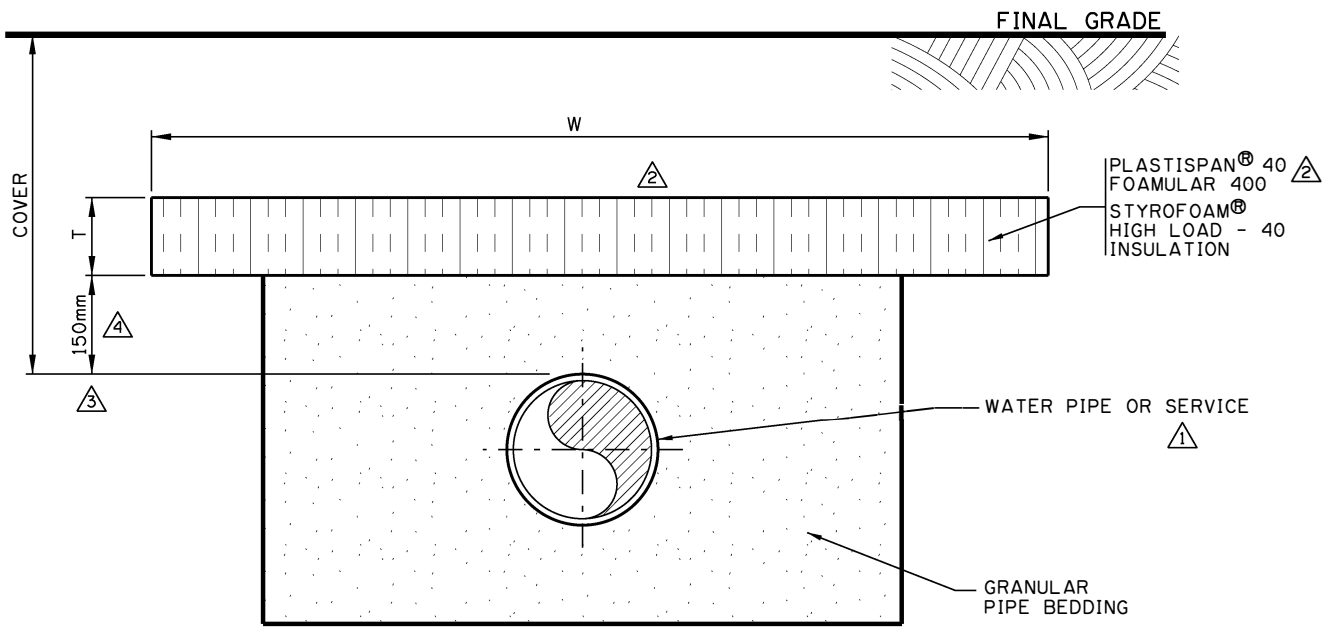

STYROFOAM HL40 + FOAMULAR 400

PIPE COVER [m]	MINIMUM INSULATION THICKNESS T [mm]	MINIMUM INSULATION WIDTH									MINIMUM INSULATION THICKNESS T [mm]	MINIMUM INSULATION WIDTH W [m] SERVICES, HYDRANT LEADS, DEAD END MAINS		
		PIPE DIAMETER 150-200 mm			PIPE DIAMETER 250-300 mm			PIPE DIAMETER 400 mm						
		CLAY	MIX	GRAVEL	CLAY	MIX	GRAVEL	CLAY	MIX	GRAVEL		CLAY	MIX	GRAVEL
1.6≤x<1.8	75	2.4	3.0	3.6	2.5	3.1	3.7	2.6	3.2	3.8	100	3.2	3.5	3.8
1.8≤x<2.0	50	2.0	2.6	3.2	2.1	2.7	3.3	2.2	2.8	3.4	100	2.8	3.1	3.4
2.0≤x<2.2	50	1.6	2.2	2.8	1.7	2.3	2.9	1.8	2.4	3.0	100	2.4	2.7	3.0
2.2≤x<2.4	50	1.2	1.8	2.4	1.3	1.9	2.5	1.4	2.0	2.6	75	2.0	2.3	2.6
2.4≤x<2.6	50	0.8	1.4	2.0	0.9	1.5	2.1	1.0	1.6	2.2	75	1.6	1.9	2.2
2.6≤x<2.8	50	0.4	1.0	1.6	0.5	1.1	1.7	0.6	1.2	1.8	75	1.2	1.5	1.8
2.8≤x<3.0	50	-	0.6	1.2	-	0.7	1.3	-	0.8	1.4	50	0.8	1.1	1.4
3.0≤x<3.2	50	-	-	0.8	-	-	0.9	-	-	1.0	50	-	0.7	1.0
3.2≤x≤3.3	50	-	-	0.4	-	-	0.5	-	-	0.6	50	-	-	0.6

PLASTISPAN 40

PIPE COVER [m]	PLASTISPAN 40 INSULATION THICKNESS T [mm]	MINIMUM INSULATION WIDTH (METERS), W=D+2(F-X)-0.3									PLASTISPAN 40 INSULATION THICKNESS T [mm]	MINIMUM INSULATION WIDTH W [m] SERVICES, HYDRANT LEADS, DEAD END MAINS		
		PIPE DIAMETER 150-200 mm			PIPE DIAMETER 250-300 mm			PIPE DIAMETER 400 mm						
		CLAY	MIX	GRAVEL	CLAY	MIX	GRAVEL	CLAY	MIX	GRAVEL		CLAY	MIX	GRAVEL
1.6≤x<1.8	89	2.4	3.0	3.6	2.5	3.1	3.7	2.6	3.2	3.8	121	3.2	3.5	3.8
1.8≤x<2.0	64	2.0	2.6	3.2	2.7	2.7	3.3	2.2	2.8	3.4	121	2.8	3.1	3.4
2.0≤x<2.2	64	1.6	2.2	2.8	2.3	2.3	2.9	1.8	2.4	3.0	121	2.4	2.7	3.0
2.2≤x<2.4	64	1.2	1.8	2.4	1.9	1.9	2.5	1.4	2.0	2.6	89	2.0	2.3	2.6
2.4≤x<2.6	64	0.8	1.4	2.0	1.5	1.5	2.1	1.0	1.6	2.2	89	1.6	1.9	2.2
2.6≤x<2.8	64	0.4	1.0	1.6	1.1	1.1	1.7	0.6	1.2	1.8	89	1.2	1.5	1.8
2.8≤x<3.0	64	-	0.6	1.2	-	0.7	1.3	-	0.8	1.4	64	0.8	1.1	1.4
3.0≤x<3.2	64	-	-	0.8	-	-	0.9	-	-	1.0	64	-	0.7	1.0
3.2≤x≤3.3	64	-	-	0.4	-	-	0.5	-	-	0.6	64	-	-	0.6

NOTES:

1. APPROVED RIGID FOAM BOARD ONLY-COMPRESSIVE STRENGTH = 40 PSI
2. MINIMUM OF 0.25m OF COMPACTED BACKFILL MATERIAL (AS PER CURRENT STANDARD SPECIFICATIONS ROAD CONSTRUCTION) IS REQUIRED OVER INSULATION PRIOR TO TRAFFIC LOADING
3. APPROVAL IS REQUIRED AS PER THE STANDARD SPECIFICATIONS WATERWORKS 504.04.15. THE CONSULTANT MAY SUBMIT ALTERNATE DESIGNS FOLLOWING THE REQUIREMENTS IN 504.04.15.

DIMENSIONS ARE IN MILLIMETRES UNLESS OTHERWISE NOTED

No.	Date	Revision	App'd
5	2022/03/31	REVISED NOTES	D.N
4	2020/04/21	REVISED NOTE & DIMENSION	D.N
3	2019/08/29	REVISED DIMENSION	B.N.
2	2015/10/28	REVISED NOTES, ADDED TITLE & TABLE, & HATCHING	
1	2010/12/07	ADDED NOTE & TABLE	B.N.

Date 2001/11/06
Scale N.T.S.
Approved by for The City of Calgary

WATERWORKS CONSTRUCTION

RIGID FOAM BOARD INSULATION HORIZONTAL LAYER

Sheet 63

File Number 453.1045.001

ISC: Unrestricted

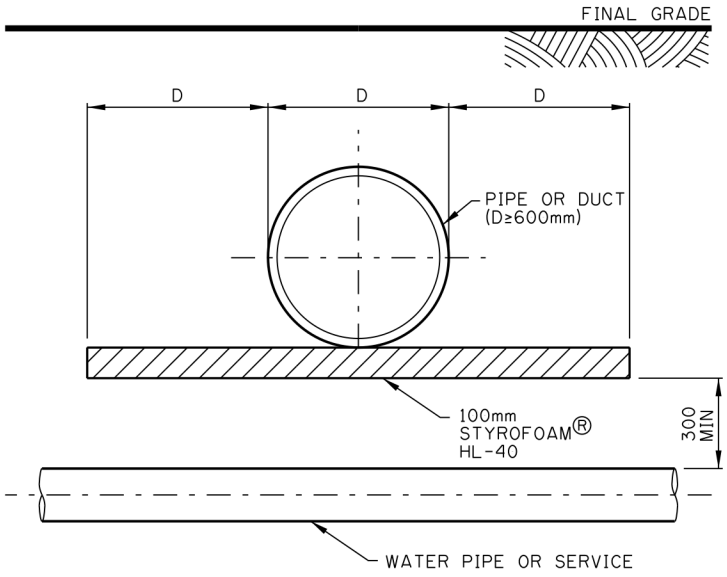

END VIEW

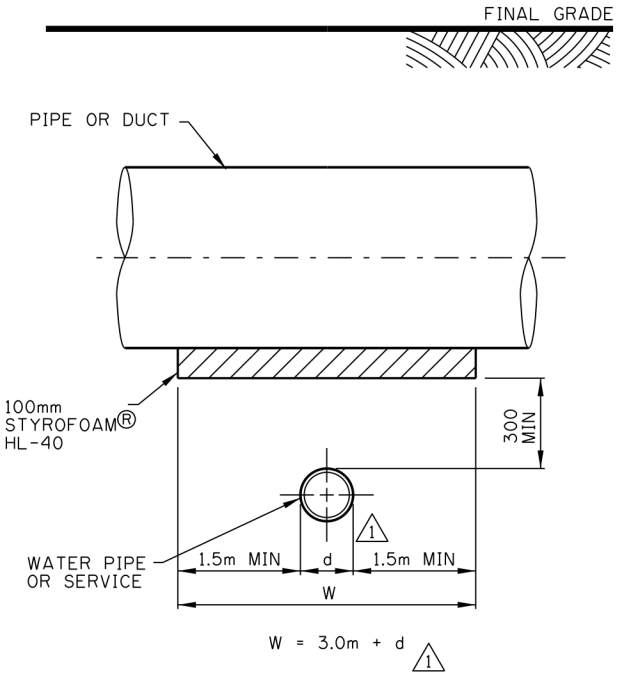

OPTION 1 - HORIZONTAL LAYER
SIDE VIEW

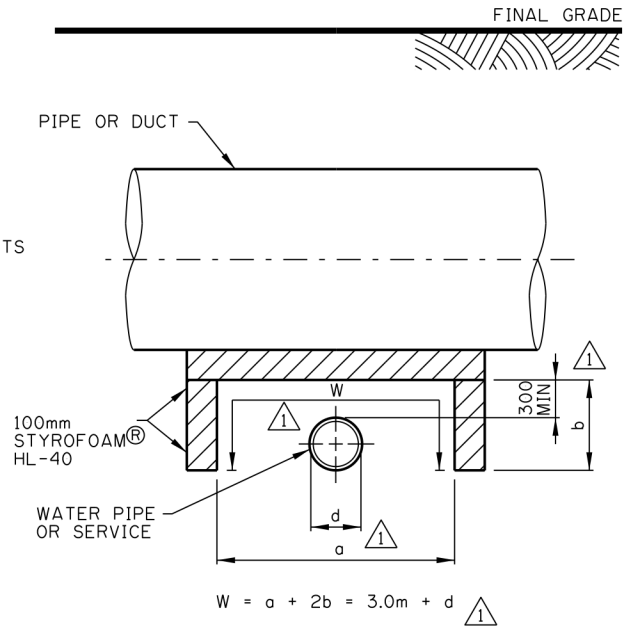

OPTION 2 - INVERTED U
SIDE VIEW

NOTES:

2

1. TOTAL PIPE COVER INSULATIVE VALUE MUST MEET MINIMUM REQUIREMENTS AS SPECIFIED IN SEC. 504.04.13 WATERWORKS SPECIFICATIONS

1

2. STYROFOAM®HIGH LOAD - 40 COMPRESSIVE STRENGTH = 40 PSI

3. APPROVAL IS REQUIRED AS PER THE STANDARD SPECIFICATIONS WATERWORKS 504.04.15. THE CONSULTANT MAY SUBMIT ALTERNATE DESIGNS FOLLOWING THE REQUIREMENTS IN 504.04.15.

3 2

4. FOR INVERTED U (OPTION 2), BOTTOM OF VERTICAL STYROFOAM® LEGS SHOULD BE LEVEL WITH BOTTOM OF PIPE/SERVICE

DIMENSIONS ARE IN MILLIMETRES
UNLESS OTHERWISE NOTED

No.	Date	Revision	App'd
3	2020/04/21	REVISED NOTE	D.N
2	2008/11/17	REVISED NOTE	BN
1	2008/02/01	DELETED & ADDED NOTES, DELETED & ADDED DIMENSIONS	BN

Date: 2007/12/01
Scale: N.T.S.
Approved by: for The City of Calgary

WATERWORKS CONSTRUCTION

LARGE DIAMETER STORM
STYROFOAM® INSULATION

Sheet: 64
File Number: 453.1046.001

ISC: Unrestricted